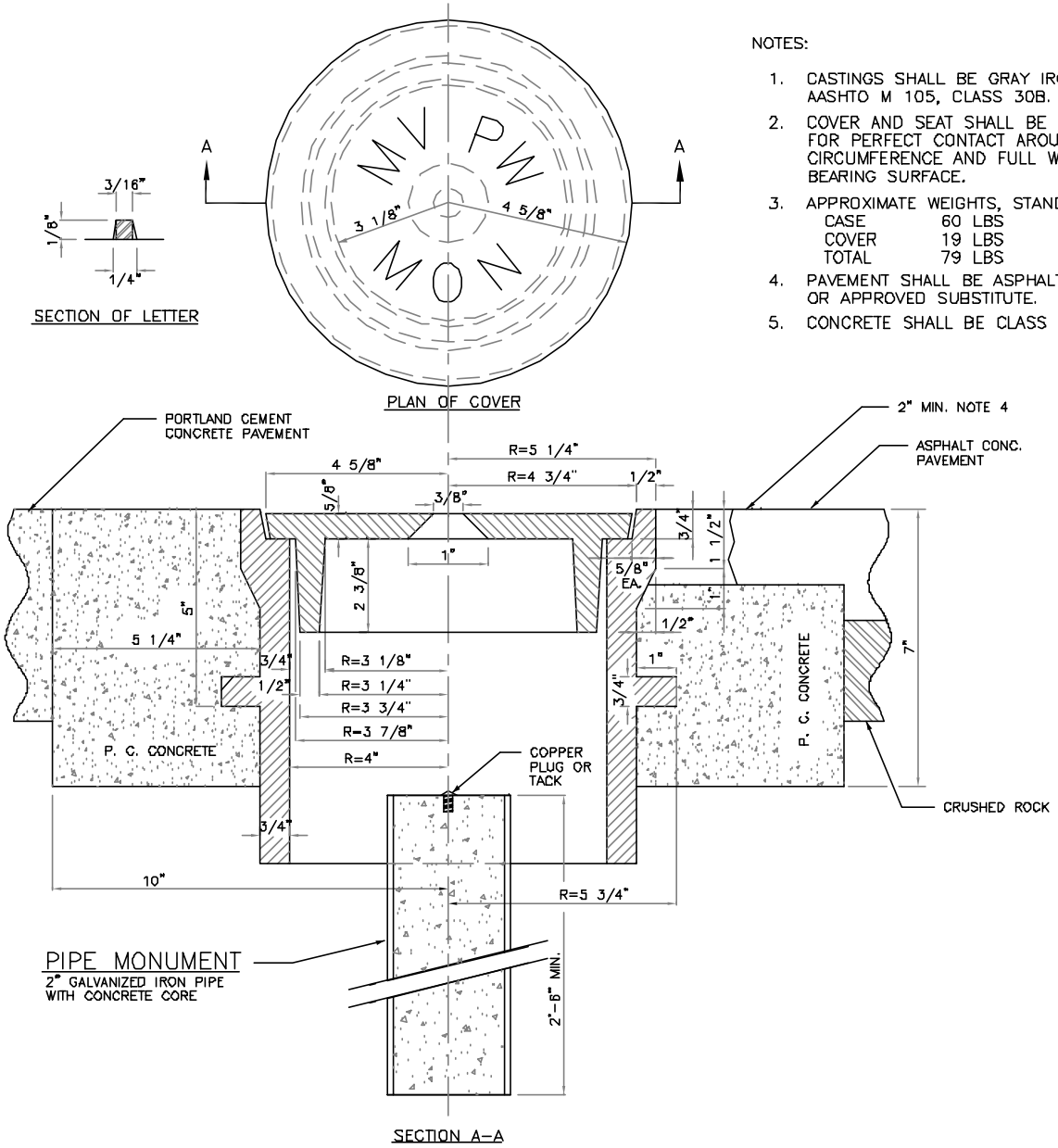

NOTES:

1. CASTINGS SHALL BE GRAY IRON AASHTO M 105, CLASS 30B.
2. COVER AND SEAT SHALL BE MACHINED FOR PERFECT CONTACT AROUND CIRCUMFERENCE AND FULL WIDTH OF BEARING SURFACE.
3. APPROXIMATE WEIGHTS, STANDARD.

CASE	60 LBS
COVER	19 LBS
TOTAL	79 LBS

4. PAVEMENT SHALL BE ASPHALT CONCRETE OR APPROVED SUBSTITUTE.
5. CONCRETE SHALL BE CLASS 3000.

The City of MAPLE VALLEY

Roadway Survey Monuments with Case and Cover

The CITY OF MAPLE VALLEY

STANDARD PLAN NO. MV- 5-012