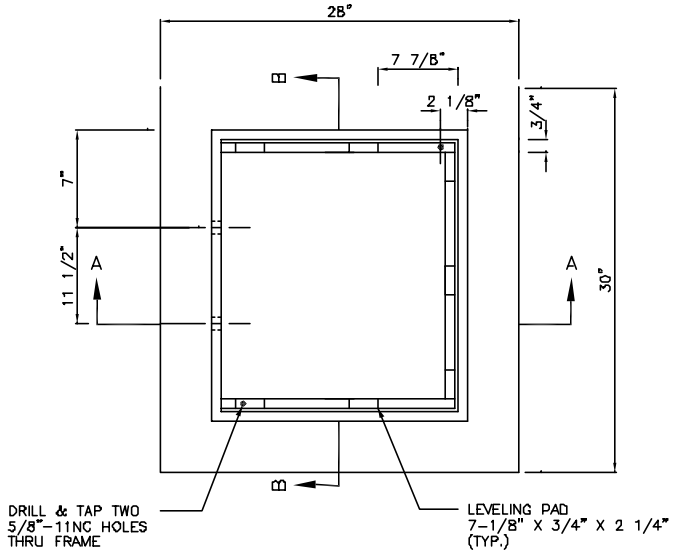

PLAN

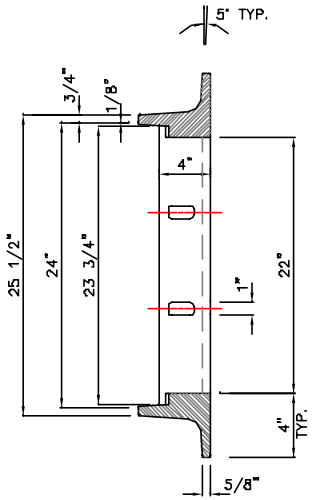

SECTION B-B

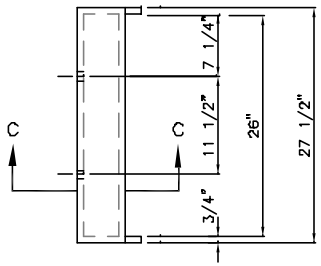

HOOD DETAIL

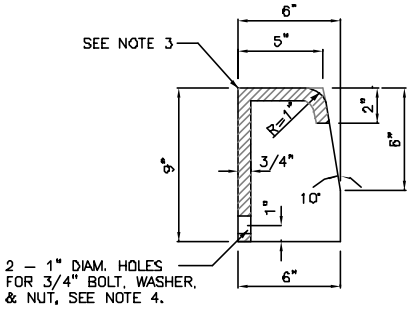

SECTION C-C

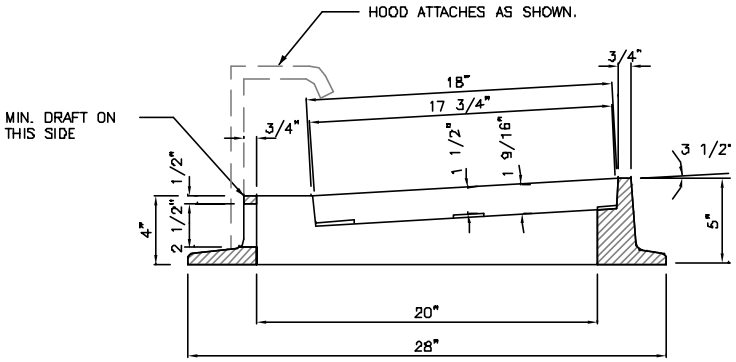

SECTION A-A

NOTES:

1. MATERIAL IS CAST IRON ASTM A48 CLASS 30B.
2. SEE DWG. NO. 2-018 FOR VANED GRATE.
3. PATTERN ON TOP SURFACE OF HOOD SHALL BE 3/16" NON-SKID DIAMOND.
4. BOLT, WASHER, AND NUT SHALL BE GALV. OR CORROSION RESISTANT.
5. SEE SEC. 7.05.

The City of MAPLE VALLEY

Through-curb Inlet Frame

The CITY OF MAPLE VALLEY

STANDARD PLAN NO. MV- 2-007