Department of Energy
Bonneville Power Administration
28401 Covington Way SE
Kent, WA 98042

July 17, 2018

Case No.:	20100351
Tract Nos.:	C-GC-5-A-15; 3C-GC-20-A-15
Line Name:	Tacoma – Grand Coulee No. 1
	(operated as Covington – Bettas Road No. 1)
ADNO:	8206; Structure No.: 5/4 – 5/5

LAND USE AGREEMENT

Consent to Use of BPA's Easement Area

This Land Use Agreement ("Agreement") is entered into by and between the United States of America, Department of Energy, Bonneville Power Administration ("BPA") and City of Maple Valley ("Holder").

BPA holds easement rights ("BPA Easement") over the following described property ("BPA Easement Area"):

> The NW1/4NE1/4 of Section 34, Township 22 North, Range 6 East, Willamette Meridian, King County, State of Washington, as shown on the attached segment of BPA Drawing No. 103220, marked as Exhibit A.

Holder has requested BPA's permission to use portions of the real property subject to the BPA Easement for Summit Park and Ballfields ("Holder's Facility").

Subject to the terms and conditions set forth in this Agreement, BPA consents to Holder's use of the BPA Easement Area for the purpose proposed by Holder, and concurs that such use will not interfere with the current operation and maintenance of BPA's transmission facilities, if constructed in the manner and at the location shown on Exhibit A and C, attached hereto and made a part hereof.

In consideration of BPA's concurrence, Holder agrees to the following:

1. This Agreement does not grant any right, privilege, or interest in land, and does not modify, change, or otherwise alter the rights BPA acquired by deed. Loss of the privileges granted by this Agreement is not compensable to Holder.

2. Holder is responsible for obtaining from the underlying landowner ("Landowner"), by good and sufficient legal instrument, all rights, interests and privileges for land use necessary and incident to the ownership and maintenance of Holder's Facility.

3. There may be other uses of the property located within the same area as Holder's Facility. This Agreement is subject to such superior rights.

4. This Agreement is valid only if Holder's Facility is constructed, operated, and maintained in conformance with the terms of this Agreement and all attached Exhibits. Relocations, changes or upgrades require BPA's prior written approval. Failure to obtain the written approval of BPA prior to making alterations to Holder's Facility shall result in the termination of this Agreement.

5. Holder acknowledges and agrees that Holder's use of the property is subordinate to BPA's easement rights. BPA reserves the right to trim or remove trees, brush or shrubs or to remove any other encroachment within the BPA Easement Area which might interfere with the operation, maintenance, construction, removal or relocation of BPA's facilities. Holder agrees to alter, relocate or remove Holder's Facility, at no cost to BPA, to correct an interference with BPA's easement rights or to accommodate future modifications of BPA's facilities.

6. Holder agrees to abide by and comply with all applicable Federal, State and local laws and regulations, including, but not limited to building and safety codes, rules issued by utility commissions, the National Electric Safety Code, entities that regulate Holder, and all applicable environmental regulations.

7. Induced voltages and currents may occur on structures or other items constructed or placed under or near high voltage transmission lines. BPA has no duty to inspect Holder's Facility or to warn of hazards. Holder shall have the continuing responsibility for the protection of personnel and equipment in the design, construction, operation and maintenance of Holder's Facility.

8. Holder shall notify BPA at least ten (10) business days prior to commencing installation of Holder's Facility. Contact: Charlene Belt, phone: 503-230-5518 or by email: crbelt@bpa.gov.

9. This Agreement is entered into with the express understanding that it is not assignable or transferable to other parties without the prior written consent of BPA.

10. BPA may terminate this Agreement upon 30 days written notice. Holder shall, within 30 days of receiving such notice of termination, and at Holder's sole expense, vacate and restore the BPA Easement Area to a condition satisfactory to BPA. Upon Holder's failure to vacate and restore the BPA Easement Area within the above stated time period, BPA may remove Holder's Facility and restore the BPA Easement Area at Holder's expense.

11. A copy of this Agreement shall be physically located at Holder's project site during construction activities. Holder's employees, contractors and representatives shall adhere to all conditions and requirements listed herein.

12. Additional terms and conditions specific to Holder's Facility may be included as part of this Agreement as Exhibit B, attached hereto and made a part hereof.

13. Holder agrees to assume risk of loss, damage, or injury which may result from Holder's use of the BPA Easement Area, except for such loss, damage, or injury for which BPA may be responsible under the provisions of the Federal Tort Claims Act, 62 Stat. 982, as amended.

14. Any damage to BPA's property caused by or resulting from Holder's use of the BPA Easement Area may be repaired by BPA, and the actual cost of such repair shall be charged against and be paid by Holder.

15. Holder's contact information:

NAME:	Laura Philpot City Manager
ADDRESS:	P.O. Box 320 Maple Valley, WA 98038
PHONE:	425-413-8800
EMAIL:	laura.philpot@maplyvalleywa.gov

Holder agrees to notify BPA in writing of any changes to the above listed contact information.

THIS AGREEMENT CANCELS AND SUPERCEDES THE LAND USE AGREEMENT EXECUTED MAY 17, 2010.

This Agreement becomes effective upon the signature of all parties.

Laura Philpot
Holder

11-8-18
Date

Laura Philpot
Print Name

City Manager
Title (if applicable)

THIS AGREEMENT IS HEREBY AUTHORIZED:

Charlene R Belt
Realty Specialist
Bonneville Power Administration

11/13/18
Date

NOTE: BPA seeks help maintaining the integrity of the electrical transmission system. Please report any vandalism or theft to the BPA Crime Witness program at 1-800-437-2744. Cash rewards of up to $25,000 will be paid should information lead to the arrest and conviction of persons committing a crime.

If you have any questions or concerns, please notify a BPA Realty Office. You may contact Charlene Belt ("BPA Representative") by telephone at 503-230-5518 or send written correspondence to the address listed at the top of this Agreement.

SEC 34 T22N R6E WM
KING COUNTY, WASHINGTON

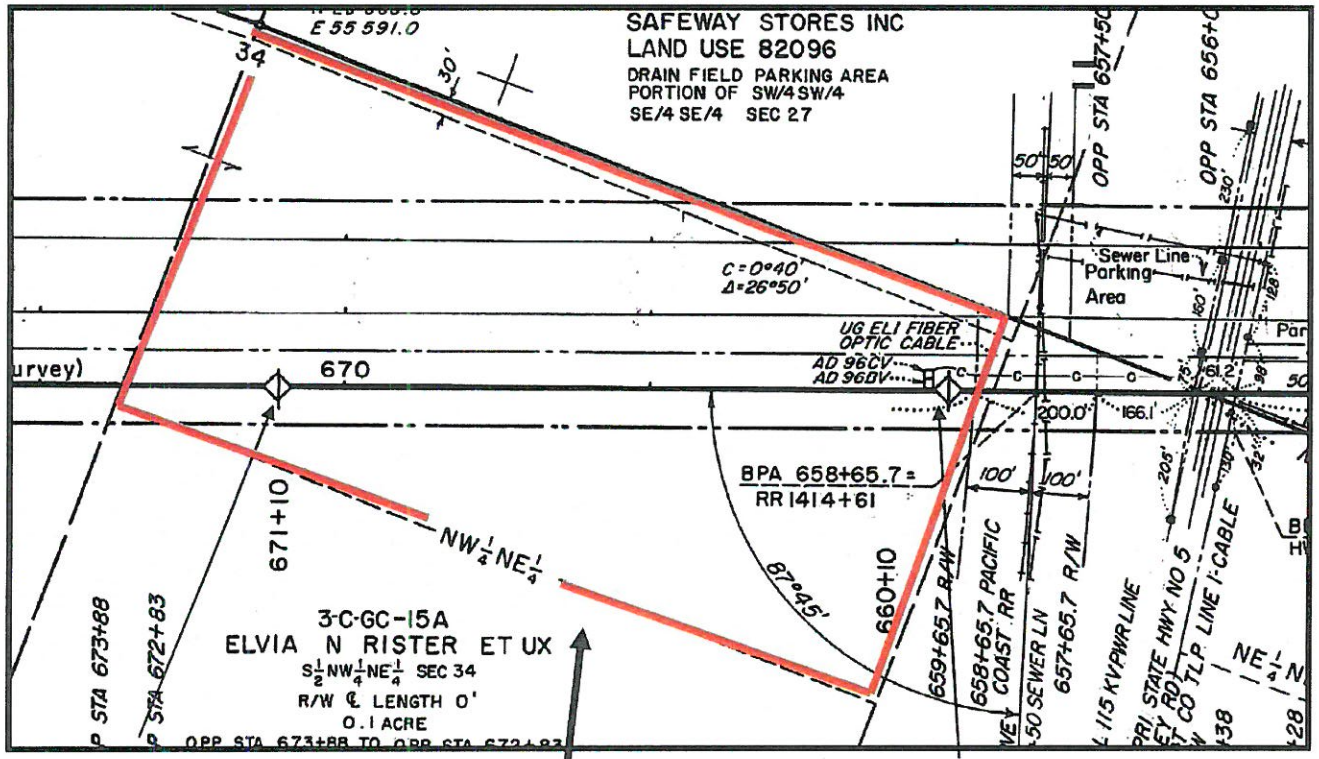

Tower 5/4

Tower 5/5

APPROXIMATE LOCATION OF
Summit Park (N1/2 NW1/4 NE1/4 of SEC 34)

UNITED STATES DEPARTMENT OF THE INTERIOR
BONNEVILLE POWER ADMINISTRATION
HEADQUARTERS, PORTLAND, OREGON

TACOMA-GRAND COULEE NO 1
TACOMA-COLUMBIA SECTION
287 KV TRANSMISSION LINE
MILE 20 FROM TACOMA

RIGHT OF WAY	DESIGN C P L		
Drawn R R-W	Drawn J D M	Approved Date 5/2/58	For Chief of Design
Traced V C L	Traced H A B	DATE 2-21-58	SHEET 20 OF 17
Checked	Checked O J M	Scr. 103220	Dwg. 171-11-D

OPER AS MILE 5 COVINGTON-COLUMBIA T NO 3

EXHIBIT A
CASE 20100351

Tract ID: 3C-GC-20-A-15; C-GC-5-A-15

Lines: Tacoma-Grand Coulee #1
(operated. as Covington-Columbia #3)

City of Maple Valley
Summit Park & Ball Fields

Exhibit B
ADDITIONAL TERMS AND CONDITIONS

1. Maintain a minimum distance of at least **15** feet between Holder's Facility and the transmission line conductors (overhead wires) at all times. Do not measure this distance with a measuring tape, pole, or other physical means. If there is the possibility that any equipment can encroach on this distance, then a safety watcher needs to be required.
2. Maintain a minimum distance of at least **50** feet between Holder's Facility and the transmission line structures.
3. Prior to start of construction within occupied easement area, contractor will have a safety tailboard meeting. Please call Charlene Belt at 503-230-5518 at least **2** week in advance to schedule meeting with Transmission Line Maintenance crew.
4. Equipment, machinery, and vehicles traveling within BPA's Easement Area shall remain at least 25 feet away from any BPA structure or guy anchor ground attachment point.
5. Holder shall not store flammable materials or refuel vehicles or equipment within BPA's Easement Area.
6. Overburden grade changes to existing ground elevations while excavating within BPA's Easement Area is prohibited.
7. The road shall maintain a minimum horizontal clearance of 50 feet to the point where steel lattice tower legs enter the earth.
8. Provide an approach off the edge of the road wide enough to turn into minimum 16 foot wide access road on the right-of-way.
9. BPA shall have the right to use the road for access to its structures, both to and along its transmission line right-of-way, for maintenance purposes.
10. The road shall be designed to withstand an HS-25 type loading caused by BPA heavy maintenance vehicles.
11. BPA shall have the right to use the parking area for access to its structures, both to and along its transmission line right-of-way.
12. The parking area shall be designed to withstand an HS-25 type loading caused by BPA heavy maintenance vehicles.
13. All fence types (ie: chain link, wood) shall maintain a minimum horizontal clearance of 50 feet to the point where steel lattice tower legs enter the earth.
14. Fencing as proposed maintains sufficient horizontal and vertical clearances to adhere to engineering standards. A maximum fence height of 12 feet is acceptable. Nuisance shocks may occur and it may be necessary to ground fencing.
15. Access gates are required and shall be 16 foot wide as well as strategically placed to allow BPA line trucks through to the structures.

16. The utilities and detention pond/water quality pond/etc. shall maintain a minimum horizontal clearance of 50 feet to the point where steel lattice tower legs enter the earth.
17. Lighting standards/posts shall maintain a height above grade of no more than 12 feet and match the existing light standards installed along the road.
18. BPA shall have the right to use the park for access to its structures, both to and along its transmission line right-of-way.
19. The underground utilities shall be placed in conduit.
20. The underground utilities shall be designed to withstand an HS-25 type loading caused by BPA heavy maintenance vehicles.
21. Bury and maintain the Electric Service Line to a depth of 24 inches or comply with applicable NESC, national, state, and/or local standards, whichever is greater.
22. The underground utilities location shall be marked with permanent signs where it enters and leaves the BPA right-of-way, and at angle points within the right-of-way.
23. Access to BPA structures shall remain open and unobstructed at all times.
24. BPA right-of-way shall be returned to its original condition following construction. No grade changes to facilitate construction or disposal of overburden shall be allowed.
25. Construction of additional transmission lines within the currently unoccupied portion of BPA's Easement Area may occur. Should Holder's use interfere with the construction, use or maintenance of said line, Holder will be required to remove such interference off BPA's Easement Area at no expense to BPA.
26. Notice: Nuisance shocks may occur within BPA's Easement Area. Grounding metal objects helps to reduce the level of shock. It is suggested that road building/construction equipment be grounded with a drag chain.

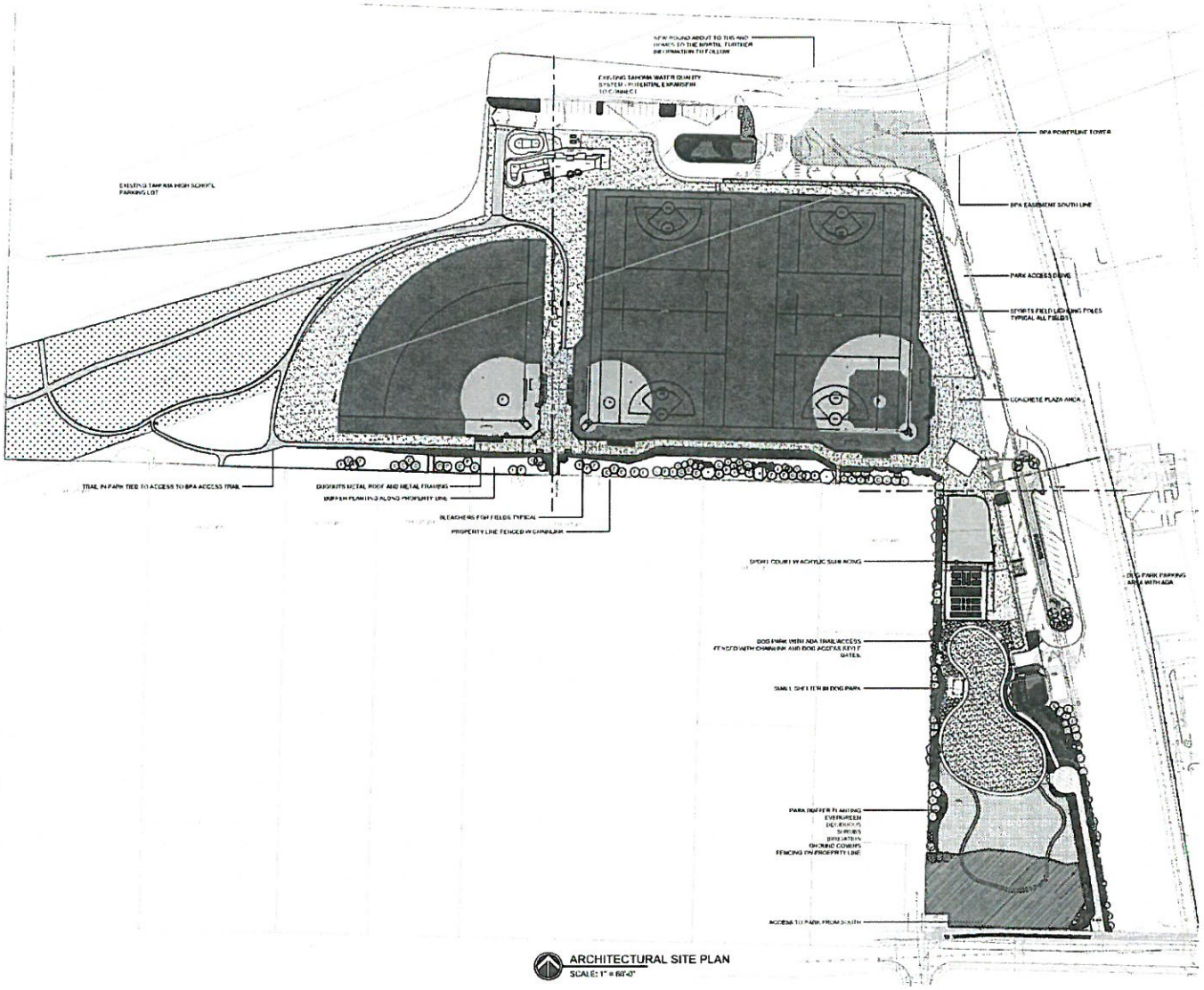

ARCHITECTURAL SITE PLAN
SCALE: 1" = 60'-0"

SITE PLAN LEGEND

- GALVANIZED CHAINLINK FENCING FOR FIELDS AND SITE
- SYNTHETIC TURF FIELD SURFACING
- PLAYGROUND SURFACING - MEETING ALL ADAMS/PSI STANDARDS FOR SAFE PLAYGROUNDS
- ACRYLIC COURT SURFACING SPORTS COURT
- MOWED LAWN AREA SETTING
- MEADOW GRASS AREA SEEDING
- DOG PARK SURFACING MATERIALS
- ASPHALT PAVING AREA
- HARDSCAPE SIDEWALK AND PAVING
- BIO RETENTION LANDSCAPING
- BUFFER PLANTING - EXISTING AND ENHANCED VEGETATION

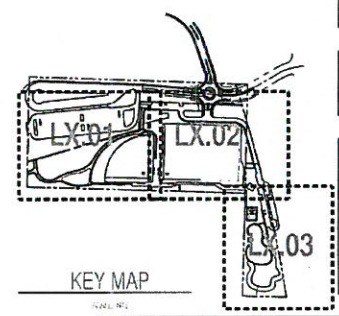

KEY MAP

CASE 20100351
EXHIBIT C

PWE1803-001
PERMIT SET: 05.25.2018

☐ APPROVED
☐ APPROVED SUBJECT TO CORRECTIONS NOTED.
DATE:
BY:
CITY OF MAPLE VALLEY PUBLIC WORKS DEPARTMENT

MAPLE VALLEY

SUMMIT PARK & BALLFIELDS
CITY OF MAPLE VALLEY PARKS AND RECREATION
23515 SE TAHOMA WAY
MAPLE VALLEY, WA 98038

SLA
LANDSCAPE ARCHITECTURE
23530 SE 450th Way
Enumclaw, WA 98022
P (425) 788-9536
F (425) 793-4276

Drawing:
SITE PLAN

Date: 5/25/2018
Job #: 2946
Scale: NTS
Design: E.SW
Drawn: E.SW
Check: E.SW
Revisions:

Sheet:
G1.03