20-115

MAYOR
SEAN P. KELLEY

CITY MANAGER
LAURA PHILPOT, P.E.

PUBLIC WORKS AND COMMUNITY DEVELOPMENT DIRECTOR
TAWNI DALZIEL, P.E.

SWM/NPDES PROGRAM MANAGER
HALLEY KIMBALL, P.E.

CITY COUNCIL
DANA PARNELLO
LINDA OLSON
LESLIE BURBERRY
ERIN WEAVER
SYD DAWSON
LINDA JOHNSON

The City of

MAPLE VALLEY

SCHEDULE OF DRAWINGS

SHEET NO.	TITLE
C1	COVER SHEET
C2	PROJECT NOTES
C3	GENERAL DETAILS
C4	VALLEY GREEN DIV. 2 TRACT B (D92161) – W.Q. LINER
C5	VALLEY GREEN DIV. 2 TRACT C (D92162) – W.Q. LINER
C6	VALLEY GREEN DIV. 1 TRACT D (D92098) – W.Q. LINER
C7	PLEASANT ACRES DIV. 2 – TRACT A (D92117) – W.Q. LINER AND SLOPE RESTORATION
C8	WITTE RD & SE 272ND ST POND (D99025) – SPILL CONTROL AND POND ACCES
C9	SAWYER CREST (D19995) – SPILL CONTROL

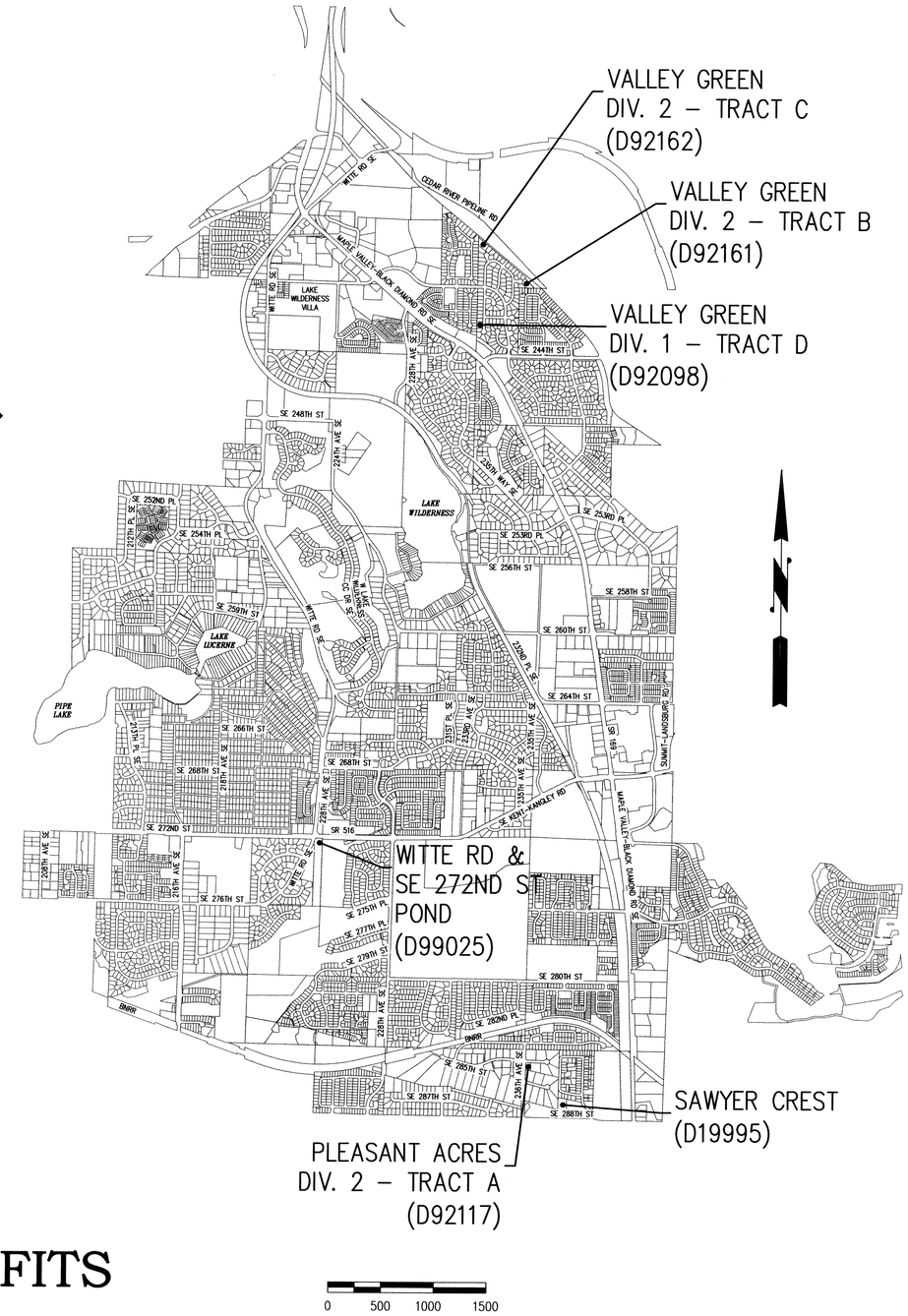

MAPLE VALLEY
2020 WATER QUALITY RETROFITS
PROJECT NO. S-10 (2020)

CAUTION!
UNDERGROUND UTILITIES EXIST IN THE AREA AND UTILITY INFORMATION SHOWN MAY BE INCOMPLETE. STATE LAW REQUIRES THAT CONTRACTOR CONTACT THE ONE-CALL UTILITY LOCATE SERVICE AT LEAST 48 HOURS BEFORE STARTING ANY CONSTRUCTION.
811

☒ APPROVED
☐ APPROVED SUBJECT TO CORRECTIONS NOTED
DATE 6/10/2020
BY
CITY OF MAPLE VALLEY PUBLIC WORKS DEPT.

DALEY-MORROW-POBLETE, INC.
726 AUBURN WAY NORTH
AUBURN, WASHINGTON 98002
PHONE: 253-333-2200; FAX: 253-333-2206
dmp INCORPORATED
ENGINEERING - SURVEYING
LAND PLANNING

CITY OF MAPLE VALLEY
P.O. BOX 320
MAPLE VALLEY, WA 98038

REVISIONS

NO.	DATE	DESCRIPTION	BY

MAPLE VALLEY
2016 WATER QUALITY RETROFITS
COVER SHEET

DRAWN: ASP
DMP NO: 20-115
DATE: 06/10/2020

ALEXANDER S. POBLETE
STATE OF WASHINGTON
28852
REGISTERED PROFESSIONAL ENGINEER
STAMP NOT VALID UNLESS SIGNED & DATED

C1

B:\Projects\20-115 WV POND RETROFS\2011SENG.DWG

20-115

GENERAL NOTES:

1. ALL CONSTRUCTION SHALL BE IN ACCORDANCE WITH CITY OF MAPLE VALLEY CODE (M.V.M.C.) 2004 MAPLE VALLEY ROAD STANDARDS, 2016 KING COUNTY SURFACE WATER DESIGN MANUAL. IT SHALL BE THE SOLE RESPONSIBILITY OF THE APPLICANT AND THE PROFESSIONAL CIVIL ENGINEER TO CORRECT ANY ERROR, OMISSION, OR VARIATION FROM THE ABOVE REQUIREMENTS FOUND IN THESE PLANS. ALL CORRECTIONS SHALL BE AT NO ADDITIONAL COST OR LIABILITY TO THE CITY OF MAPLE VALLEY.

2. THE DESIGN ELEMENTS WITHIN THESE PLANS HAVE BEEN REVIEWED ACCORDING TO THE CITY OF MAPLE VALLEY ENGINEERING REVIEW CHECKLIST. SOME ELEMENTS MAY HAVE BEEN OVERLOOKED OR MISSED BY THE CITY OF MAPLE VALLEY DIVISION PLAN REVIEWER. ANY VARIANCE FROM ADOPTED STANDARDS IS NOT ALLOWED UNLESS SPECIFICALLY APPROVED BY THE CITY OF MAPLE VALLEY, PRIOR TO CONSTRUCTION.

3. APPROVAL OF THIS ROAD, GRADING, AND DRAINAGE PLAN DOES NOT CONSTITUTE AN APPROVAL OF ANY OTHER CONSTRUCTION (e.g. DOMESTIC WATER CONVEYANCE, SEWER CONVEYANCE, GAS, ELECTRICAL, ETC.)

4. BEFORE ANY CONSTRUCTION OR DEVELOPMENT ACTIVITY OCCURS, A PRECONSTRUCTION MEETING MUST BE HELD BETWEEN THE CITY OF MAPLE VALLEY AND THE CONTRACTOR.

5. A COPY OF THESE APPROVED PLANS MUST BE ON THE JOB SITE WHENEVER CONSTRUCTION IS IN PROGRESS.

6. THE CITY OF MAPLE VALLEY ALLOWS CONSTRUCTION ACTIVITY DURING THE HOURS OF 7 AM TO 6 PM WEEKDAYS, AND NO WORK ON HOLIDAYS, SATURDAYS AND SUNDAYS. ALL WORK ON DAYS OTHER THAN WEEKDAYS IS SUBJECT TO THE APPROVAL OF THE CITY OF MAPLE VALLEY.

7. FRANCHISED UTILITIES OR OTHER INSTALLATIONS THAT ARE NOT SHOWN ON THESE APPROVED PLANS SHALL NOT BE CONSTRUCTED UNLESS AN APPROVED SET OF PLANS THAT MEET ALL REQUIREMENTS OF THE CITY OF MAPLE VALLEY ARE SUBMITTED TO THE CITY OF MAPLE VALLEY THREE DAYS PRIOR TO CONSTRUCTION.

8. ALL UTILITY TRENCHES SHALL BE BACKFILLED AND COMPACTED TO 95 % DENSITY.

9. ALL ROADWAY SUBGRADE SHALL BE BACKFILLED AND COMPACTED TO 95 % DENSITY (WSDOT 2-06.3).

10. OPEN CUTTING OF EXISTING ROADWAYS IS NOT ALLOWED UNLESS SPECIFICALLY APPROVED BY THE CITY OF MAPLE VALLEY AND NOTED ON THESE APPROVED PLANS. ANY OPEN CUT SHALL BE RESTORED IN ACCORDANCE WITH WSDOT 5-04 AND 7-08.3(3).

11. THE CONTRACTOR SHALL BE RESPONSIBLE FOR PROVIDING ADEQUATE SAFEGUARDS, SAFETY DEVICES, PROTECTIVE EQUIPMENT, FLAGGERS, AND OTHER NEEDED ACTIONS TO PROTECT THE LIFE, HEALTH, AND SAFETY OF THE PUBLIC, AND TO PROTECT PROPERTY IN CONNECTION WITH THE PERFORMANCE OF WORK COVERED BY THE CONTRACTOR. ANY WORK WITHIN THE TRAVELED RIGHT-OF-WAY THAT MAY INTERRUPT NORMAL TRAFFIC FLOW SHALL REQUIRE A TRAFFIC CONTRL PLAN(S) APPROVED BY THE CITY OF MAPLE VALLEY.

RIP-RAP NOTES:

RIP-RAP (QUARRY SPALLS) PROTECTION SHALL BE PER WSDOT SECTION 9-13.1 WITH THE FOLLOWING GRADATION:

PASSING 8-INCH SQUARE SIEVE:	100%
PASSING 3-INCH SQUARE SIEVE:	40 TO 60% MAX.
PASSING 3/4-INCH SQUARE SIEVE:	0 TO 10% MAX.

GENERAL CONSTRUCTION SEQUENCE:

1. SCHEDULE AND ATTEND A PRECONSTRUCTION CONFERENCE WITH THE CITY OF MAPLE VALLEY.

2. POST SIGN WITH NAME AND PHONE NUMBER OF ESC SUPERVISOR.

3. INSTALL TEMPORARY EROSION CONTROL MEASURES SHOWN AS (IF) SHOWN ON THE PLANS.

4. SEE PLANS FOR CONSTRUCTION SEQUENCE.

5. MAINTAIN EROSION CONTROL MEASURES IN ACCORDANCE WITH CITY OF MAPLE VALLEY STANDARDS AND MANUFACTURER'S RECOMMENDATIONS.

6. RELOCATE EROSION CONTROL MEASURES OR INSTALL NEW MEASURES SO THAT AS SITE CONDITIONS CHANGE THE EROSION AND SEDIMENT CONTROL IS ALWAYS IN ACCORDANCE WITH THE CITY OF MAPLE VALLEY EROSION AND SEDIMENT CONTROL STANDARDS.

7. COVER ALL AREAS THAT WILL BE UNWORKED FOR MORE THAN SEVEN DAYS DURING THE DRY SEASON OR TWO DAYS DURING THE WET SEASON WITH STRAW, WOOD FIBER MULCH, COMPOST, PLASTIC SHEETING OR EQUIVALENT.

8. STABILIZE ALL AREA THAT REACH FINAL GRADE WITHIN SEVEN DAYS.

9. SEED OR SOD ANY AREAS TO REMAIN UNWORKED FOR MORE THAN 30 DAYS.

10. UPON COMPLETION OF THE PROJECT, ALL DISTURBED AREAS MUST BE STABILIZED AND BMPs REMOVED IF APPROPRIATE.

11. UPON FINAL SITE STABILIZATION, CLEAN CONSTRUCTION AND ALL AFFECTED AREAS.

DRAINAGE NOTES:

1. ALL PIPE AND APPURTENANCES SHALL BE LAID ON A PROPERLY PREPARED FOUNDATION IN ACCORDANCE WITH WSDOT 9-03.12(3). THIS SHALL INCLUDE LEVELING AND COMPACTING THE TRENCH BOTTOM, THE TOP OF THE FOUNDATION MATERIAL, AND ANY REQUIRED PIPE BEDDING TO A UNIFORM GRADE SO THAT THE ENTIRE PIPE IS SUPPORTED BY A UNIFORMLY DENSE UNYIELDING BASE.

2. ALL DRAINAGE STRUCTURES, SUCH AS CATCH BASINS AND MANHOLES, NOT LOCATED WITHIN A TRAVELED ROADWAY OR SIDEWALK SHALL HAVE SOLID LOCKING LIDS. ALL DRAINAGE STRUCTURES ASSOCIATED WITH A PERMANENT RETENTION/DETENTION FACILITY SHALL HAVE SOLID LOCKING LIDS. ALL OTHER CATCH BASINS TO HAVE LOCKING VANED GRATES UNLESS OTHERWISE NOTED.

3. ALL CATCH BASIN GRATES SHALL CONFORM TO MVRS DRAWING NUMBERS 2-008, 2-009, 2-010 AND 2-011, AND SHALL INCLUDE THE STAMPING "OUTFALL TO STREAM, DUMP NO POLLUTANTS".

4. ROCK FOR EROSION PROTECTION OF ROADWAY DITCHES, WHERE REQUIRED, MUST BE OF SOUND QUARRY ROCK, PLACED TO A DEPTH OF 1 FOOT, AND MUST MEET THE FOLLOWING SPECIFICATIONS: 8" 100% PASSING; 3" ROCK 40% MAX. PASSING; AND 3/4" ROCK 10% MAX. PASSING.

5. ALL STORM DRAINAGE CONVEYANCE PIPE SHALL BE ONE OF THE FOLLOWING AS DESIGNATED (UNLESS OTHERWISE NOTED):

A. CONCRETE STORM SEWER PIPE SHALL CONFORM TO THE REQUIREMENTS OF ASTM C 76-85 CLASS IV REINFORCED CONCRETE PIPE.

B. SMOOTH WALL SPIRAL RIB METAL PIPE (ALUMINUM OR ALUMINIZED STEEL). 16 GAUGE WITH 3/4" X 5/8" ON 12" CENTER.

C. DUCTILE IRON PIPE CLASS 50 OR 52.

D. POLYVINYL CLORIDE (PVC) – SDR 35 OR THICKER CONFORMING TO ASTM D3034

E. ADS SANITITE HDPE (HIGH DENSITY POLYPROPYLENE) SIZES 12", 15", AND 18" MAXIMUM JOINT LENGTH = 13'.

F. MINIMUM PIPE COVER SHALL BE 2.0 FEET. (1.0' IF DUCTILE IRON PIPE IS USED)

G. PIPE MAY BE ANY OF THE ABOVE PROVIDED:

1. PIPE JOINTS MUST BE OF THE SAME MATERIALS, AND

2. WHERE A PIPE MATERIAL IS SPECIFICALLY SHOWN ON THE PLAN, THAT MATERIAL MUST BE USED.

6. ALL STAKING FOR TYPE-2 CATCH BASINS SHALL ALSO INCLUDE AN OFFSET TO TOP BACK OF CURB.

7. THE CONTRACTOR IS RESPONSIBLE FOR COORDINATING THE LOCATIONS OF ALL STUB-OUT CONVEYANCE LINES WITH RESPECT TO UTILITIES (e.g. POWER, GAS, TELEPHONE, TELEVISION, ETC.).

BERM EMBANKMENT NOTES

1. THE POND BERM EMBANKMENTS MUST BE CONSTRUCTED ON NATIVE CONSOLIDATED SOIL (OR ADEQUATELY COMPACTED AND STABLE FILL SOILS ANALYZED BY A GEOTECHNICAL ENGINEER) FREE OF LOOSE SURFACE SOIL MATERIALS, ROOTS, AND OTHER ORGANIC DEBRIS.

2. POND BERM EMBANKMENTS GREATER THAN 4 FEET IN HEIGHT MUST BE CONSTRUCTED BY EXCAVATING A KEY EQUAL TO 50% OF THE BERM EMBANKMENT CROSS-SECTIONAL HEIGHT AND WIDTH. THIS REQUIREMENT MAY BE WAIVED IF SPECIFICALLY RECOMMENDED BY A GEOTECHNICAL ENGINEER.

3. THE POND BERM EMBANKMENTS SHALL BE CONSTRUCTED OF SOIL PLACED IN 6-INCH LIFTS COMPACTED TO AT LEAST 95% OF MAXIMUM DRY DENSITY, WITHIN 2 PERCENTAGE POINTS OF THE OPTIMUM MOISTURE CONTENT, MODIFIED PROCTOR METHOD ASTM D1557. DENSITY TESTS SHALL BE PERFORMED FOR EACH LIFT TO CONFIRM COMPLIANCE WITH THIS SPECIFICATION. THE SOIL USED FOR CONSTRUCTION SHALL HAVE THE FOLLOWING SOIL CHARACTERISTICS: A MINIMUM OF 20% SILT AND CLAY, A MAXIMUM OF 60% SAND, A MAXIMUM OF 60% SILT AND CLAY, WITH NOMINAL GRAVEL AND COBBLE CONTENT. IN GENERAL, EXCAVATED GLACIAL TILL IS WELL SUITED FOR BERM EMBANKMENT MATERIAL.

EROSION AND SEDIMENT CONTROL NOTES

1. APPROVAL OF THIS EROSION AND SEDIMENT CONTROL (ESC) PLAN DOES NOT CONSTITUTE AN APPROVAL OF PERMANENT ROAD OR DRAINAGE DESIGN (E.G., SIZE AND LOCATION OF ROADS, PIPES, RESTRICTORS, CHANNELS, RETENTION FACILITIES, UTILITIES, ETC.).

2. THE IMPLEMENTATION OF THESE ESC PLANS AND THE CONSTRUCTION, MAINTENANCE, REPLACEMENT, AND UPGRADING OF THESE ESC FACILITIES IS THE RESPONSIBILITY OF THE CONTRACTOR/ESC SUPERVISOR UNTIL ALL CONSTRUCTION IS APPROVED.

3. THE BOUNDARIES OF THE CLEARING LIMITS SHOWN ON THIS PLAN SHALL BE CLEARLY FLAGGED BY A CONTINUOUS LENGTH OF SURVEY TAPE (OR FENCING, IF REQUIRED) PRIOR TO CONSTRUCTION. DURING THE CONSTRUCTION PERIOD, NO DISTURBANCE BEYOND THE CLEARING LIMITS SHALL BE PERMITTED. THE CLEARING LIMITS SHALL BE MAINTAINED BY THE APPLICANT/ESC SUPERVISOR FOR THE DURATION OF CONSTRUCTION.

4. THE ESC FACILITIES SHOWN ON THIS PLAN MUST BE CONSTRUCTED PRIOR TO OR IN CONJUNCTION WITH ALL CLEARING AND GRADING SO AS TO ENSURE THAT THE TRANSPORT OF SEDIMENT TO SURFACE WATERS, DRAINAGE SYSTEMS, AND ADJACENT PROPERTIES IS MINIMIZED.

5. THE ESC FACILITIES SHOWN ON THIS PLAN ARE THE MINIMUM REQUIREMENTS FOR ANTICIPATED SITE CONDITIONS. DURING THE CONSTRUCTION PERIOD, THESE ESC FACILITIES SHALL BE UPGRADED AS NEEDED FOR UNEXPECTED STORM EVENTS AND MODIFIED TO ACCOUNT FOR CHANGING SITE CONDITIONS (E.G., ADDITIONAL SUMP PUMPS, RELOCATION OF DITCHES AND SILT FENCES, ETC.).

6. THE ESC FACILITIES SHALL BE INSPECTED DAILY BY THE CONTRACTOR/ESC SUPERVISOR AND MAINTAINED TO ENSURE CONTINUED PROPER FUNCTIONING. WRITTEN RECORDS SHALL BE KEPT OF WEEKLY REVIEWS OF THE ESC FACILITIES DURING THE WET SEASON (OCT. 1 TO APRIL 30) AND OF MONTHLY REVIEWS DURING THE DRY SEASON (MAY 1 TO SEPT. 30).

7. ANY AREAS OF EXPOSED SOILS, INCLUDING ROADWAY EMBANKMENTS, THAT WILL NOT BE DISTURBED FOR TWO DAYS DURING THE WET SEASON OR SEVEN DAYS DURING THE DRY SEASON SHALL BE IMMEDIATELY STABILIZED WITH THE APPROVED ESC METHODS (E.G., SEEDING, MULCHING, PLASTIC COVERING, ETC.).

8. ANY AREA NEEDING ESC MEASURES NOT REQUIRING IMMEDIATE ATTENTION SHALL BE ADDRESSED WITHIN FIFTEEN (15) DAYS.

9. THE ESC FACILITIES ON INACTIVE SITES SHALL BE INSPECTED AND MAINTAINED A MINIMUM OF ONCE A MONTH OR WITHIN FORTY-EIGHT (48) HOURS FOLLOWING A STORM EVENT.

10. AT NO TIME SHALL MORE THAN ONE (1) FOOT OF SEDIMENT BE ALLOWED TO ACCUMULATE WITHIN A CATCH BASIN. ALL CATCH BASINS AND CONVEYANCE LINES SHALL BE CLEANED PRIOR TO PAVING. THE CLEANING OPERATION SHALL NOT FLUSH SEDIMENT-LADEN WATER INTO THE DOWNSTREAM SYSTEM.

11. STABILIZED CONSTRUCTION ENTRANCES AND ROADS SHALL BE INSTALLED AT THE BEGINNING OF CONSTRUCTION AND MAINTAINED FOR THE DURATION OF THE PROJECT. ADDITIONAL MEASURES, SUCH AS WASH PADS, MAY BE REQUIRED TO ENSURE THAT ALL PAVED AREAS ARE KEPT CLEAN FOR THE DURATION OF THE PROJECT.

12. ANY PERMANENT FLOW CONTROL FACILITY USED AS A TEMPORARY SETTLING BASIN SHALL BE MODIFIED WITH THE NECESSARY EROSION CONTROL MEASURES AND SHALL PROVIDE ADEQUATE STORAGE CAPACITY. IF THE FACILITY IS TO FUNCTION ULTIMATELY AS AN INFILTRATION SYSTEM, THE TEMPORARY FACILITY MUST BE GRADED SO THAT THE BOTTOM AND SIDES ARE AT LEAST THREE FEET ABOVE THE FINAL GRADE OF THE PERMANENT FACILITY.

13. WHERE STRAW MULCH FOR TEMPORARY EROSION CONTROL IS REQUIRED, IT SHALL BE APPLIED AT A MINIMUM THICKNESS OF 2 TO 3 INCHES.

14. PRIOR TO THE BEGINNING OF THE WET SEASON (OCT. 1), ALL DISTURBED AREAS SHALL BE REVIEWED TO IDENTIFY WHICH ONES CAN BE SEEDED IN PREPARATION FOR THE WINTER RAINS. DISTURBED AREAS SHALL BE SEEDED WITHIN ONE WEEK OF THE BEGINNING OF THE WET SEASON. A SKETCH MAP OF THOSE AREAS TO BE SEEDED AND THOSE AREAS TO REMAIN UNCOVERED SHALL BE SUBMITTED TO THE CITY INSPECTOR. THE CITY INSPECTOR CAN REQUIRE SEEDING OF ADDITIONAL AREAS IN ORDER TO PROTECT SURFACE WATERS, ADJACENT PROPERTIES, OR DRAINAGE FACILITIES.

15. UPON COMPLETION OF THE PROJECT, ALL DISTURBED AREAS MUST BE STABILIZED AND BEST MANAGEMENT PRACTICES REMOVED IF APPROPRIATE.

TEMPORARY COVER:

1. SCHEDULE:

A. FROM OCTOBER 1 TO APRIL 30 ANY DISTURBED AREA IN WHICH NO ADDITIONAL WORK WILL BE PERFORMED WITHIN 2 DAYS SHALL BE PROTECTED.

B. FROM MAY 1 TO SEPTEMBER 30 ANY DISTURBED AREA IN WHICH NO ADDITIONAL WORK WILL BE PERFORMED WITHIN 7 DAYS SHALL BE PROTECTED BY STRAW MULCH, WOOD FIBER MULCH, COMPOST, PLASTIC SHEETING, CRUSHED ROCK, OR OTHER APPROVED METHODS.

2. PREFERRED MULCH, HAY, OR STRAW:

A. DEPTH OF THE APPLICATION A MINIMUM OF 2 INCHES.

B. APPLICATION RATE
75 TO 100 POUNDS (TWO TO THREE BALES) PER 1,000 SQ. FT.
1.5 TO 2.5 TONS (90 TO 120 BALES) PER ACRE

3. IN AREAS 2:1 OR STEEPER, ALL WINDBLOWN AREA MULCH MAY NEED TO BE ANCHORED DOWN WITH THE NETTING, KEPT MOIST, OR BE AN EQUIVALENT APPROVED METHOD.

PERMANENT COVER:

1. CONSTRUCTION ACCEPTANCE WILL BE SUBJECT TO A WELL ESTABLISHED GROUND COVER THAT WILL FULFILL THE REQUIREMENT OF THE APPROVED CONSTRUCTION PLAN.

2. ALL DISTURBED AREAS, SUCH AS RETENTION FACILITIES, ROADWAY BACKSLOPES, ETC., SHALL BE SEEDED WITH A PERMANENT GROUND COVER OR AS DIRECTED BY CITY INSPECTOR TO MINIMIZE EROSION. GRASS WILL BE DONE USING AN APPROVED HYDROSEEDER OR OTHERWISE APPROVED BY ENGINEER.

PREPARATION OF SURFACE:

1. ALL AREAS TO BE SEEDED SHALL BE CULTIVATED TO THE SATISFACTION OF THE ENGINEER OR CITY INSPECTOR. THIS MAY BE ACCOMPLISHED BY DISKING, RAKING, OR OTHER ACCEPTABLE MEANS.

2. IMMEDIATELY FOLLOWING FINISHED GRADING, PERMANENT VEGETATION WILL BE APPLIED (2.5 TO 3 POUNDS PER 1,000 SQ.FT.) HYDROSEED AS REQUIRED.

STORMWATER TRACT "LOW-GROW" SEED MIX

NAME	PERCENTAGE OF MIX
DWARF TALL FESCUE	40%
DWARF PERENNIAL RYE "BARCLAY"*	30%
RED FESQUE	25%
COLONIAL BENTGRASS	5%

* IF WILDFLOWERS ARE USED AND SOWING IS DONE BEFORE LABOR DAY, THE AMOUNT OF DWARF PERENNIAL RYE MAY BE REDUCED PROPORTIONATELY TO THE AMOUNT OF WILDFLOWER SEED USED.

THE FOLLOWING BMPS SHALL APPLY TO ALL GRADING AND CLEARING ACTIVITY PERFORMED BETWEEN OCTOBER 1 AND MARCH 31:

1. GRADING AND CONSTRUCTION SHALL BE TIMED AND CONDUCTED IN STAGES TO MINIMIZE SOIL EXPOSURE.

2. EXPOSED SOILS SHALL BE COVERED WITHIN 2 DAYS USING DAM MULCH, SOD, HOG FUEL, PLASTIC OR OTHER APPROVED PROTECTED COVER.

3. INSPECT AND MAINTAIN SEDIMENT CONTROL MEASURES DAILY.

A. REPLACE ANY DAMAGED BMPS AND UPGRADE BASED ON WEATHER CONDITIONS.

B. REMOVE SEDIMENT ACCUMULATION ONCE DEPTH EXCEEDS 6 INCHES.

4. INSTALL COIR LOG, ROCK OR STRAW BALE CHECK DAMS EVERY 100 FEET ON CENTER ALONG ALL DRAINAGE INTERCEPTOR DITCHES.

5. EROSION CONTROL MATERIALS ARE TO BE STOCKPILED ON SITE PRIOR TO ANY SITE ACTIVITY.

6. AT STORM EVENT, NO ACTIVITY WILL OCCUR ON SITE, EXCEPT WORK ON EROSION CONTROL.

EROSION AND SEDIMENTATION CONTROL BMPS:

1. GRADING AND CONSTRUCTION SHALL BE TIMED AND CONDUCTED IN STAGES TO MINIMIZE SOIL EXPOSURE.

2. THE CONTRACTOR SHALL PREVENT THE TRANSPORT OF THE SEDIMENT ONTO A PAVED SURFACE DURING CONSTRUCTION. IF SEDIMENT IS TRANSFERRED ONTO A PAVED SURFACE IT SHALL BE THE CONTRACTOR'S RESPONSIBILITY TO CLEAN IT IMMEDIATELY.

3. STOCKPILES ARE TO BE LOCATED IN A SAFE AREA AND ADEQUATE COVER WITHIN 24 HOURS TO PREVENT SOILS LOSSES.

4. THE CONTRACTOR SHALL MAINTAIN AND REPAIR AS NECESSARY ALL TEMPORARY AND PERMANENT EROSION CONTROL BMPS TO ASSURE CONTINUED PERFORMANCE.

5. ADDITIONAL MULCH COVER, FILTER BARRIERS, AND/OR HAY BALES MAY BE REQUIRED TO PREVENT/MINIMIZE EROSION AND SEDIMENTATION DURING CONSTRUCTION.

6. AFTER EACH DAY OF ACTIVITY, ALL IMPACTED STREETS ARE TO BE SWEPT WITH A STREET SWEEPER.

☒ APPROVED
☐ APPROVED SUBJECT TO CORRECTIONS NOTED
DATE 6/10/2020
BY
CITY OF MAPLE VALLEY PUBLIC WORKS DEPT.

DALEY-MORROW-POBLETE, INC.
726 AUBURN WAY NORTH
AUBURN, WASHINGTON 98002
PHONE: 253-333-2200, FAX: 253-333-2206
dmp INCORPORATED
ENGINEERING - SURVEYING
LAND PLANNING

CITY OF MAPLE VALLEY
P.O. BOX 320
MAPLE VALLEY, WA 98038

REVISIONS

NO.	DATE	DESCRIPTION	BY

MAPLE VALLEY
2016 WATER QUALITY RETROFITS

PROJECT NOTES

DRAWN: ASP
DMP NO: 20-115
DATE: 06/10/2020

ALEXANDER S. POBLETE
STATE OF WASHINGTON
28752
REGISTERED PROFESSIONAL ENGINEER
06/10/2020
STAMP NOT VALID UNLESS SIGNED & DATED

C2

B:\Projects\20-115 MV POND RETROFITS\20115DNG.DWG

20-115

LOW PERMEABILITY LINER OPTIONS

COMPACTED TILL LINERS

1. LINER THICKNESS SHALL BE 18 INCHES MINIMUM AFTER COMPACTION.
2. SOIL SHALL BE COMPACTED TO 95% MINIMUM DRY DENSITY, MODIFIED PROCTOR METHOD (ASTM D-1557).
3. A DIFFERENT DEPTH AND DENSITY SUFFICIENT TO RETARD THE INFILTRATION RATE TO 2.4×10^{-5} INCHES PER MINUTE (1×10^{-6} CM/S) MAY ALSO BE USED IN LIEU OF CRITERIA 1 AND 2.
4. SOIL SHOULD BE PLACED IN 6 INCH LIFTS.
5. SOILS MAY BE USED THAT MEET THE FOLLOWING GRADATION:

SIEVE SIZE	PERCENT PASSING
6 INCH	100
4 INCH	90
#4	70 – 100
#200	20 – 100

CLAY LINERS

1. LINER THICKNESS SHALL BE 12 INCHES.
2. CLAY SHALL BE COMPACTED TO 95% MINIMUM DRY DENSITY, MODIFIED PROCTOR METHOD (ASTM D-1557).
3. A DIFFERENT DEPTH AND DENSITY SUFFICIENT TO RETARD THE INFILTRATION RATE TO 2.4 x 10-5 INCHES PER MINUTE (1 X 10-6 CM/S) MAY ALSO BE USED IN LIEU OF CRITERIA 1 AND 2.
4. THE SLOPE OF CLAY LINERS MUST BE RESTRICTED TO 3H:1V FOR ALL AREAS REQUIRING SOIL COVER; OTHERWISE, THE SOIL LAYER MUST BE STABILIZED BY ANOTHER METHOD SO THAT SOIL SLIPPAGE INTO THE FACILITY DOES NOT OCCUR. ANY ALTERNATIVE SOIL STABILIZATION METHOD MUST TAKE MAINTENANCE ACCESS INTO CONSIDERATION.
5. WHERE CLAY LINERS FROM THE SIDES OF PONDS MAINTAINED BY THE CITY, THE INTERIOR SIDE SLOPES MUST NOT BE STEEPER THAN 3:1, IRRESPECTIVE OF FENCING. THIS RESTRICTION IS TO ENSURE THAT ANYONE FALLING INTO THE POND MAY SAFELY CLIMB OUT. THE SAME CRITERION IS RECOMMENDED FOR PRIVATELY OWNED AND MAINTAINED PONDS.

GEOMEMBRANE LINERS

1. GEOTEXTILE PROPERTIES SHALL BE PER WSDOT SPECS. SECTION 9-33.2 (TABLE 4).
2. GEOMEMBRANE LINERS SHALL BE UV RESISTANT AND HAVE A MINIMUM THICKNESS OF 30 MILS. A THICKNESS OF 40 MILS SHALL BE USED IN AREAS OF MAINTENNACE ACCESS OR WHERE HEAVY MACHINERY MUST BE OPERATED OVER THE MEMBRANE.
3. GEOMEMBRANES SHALL BE BEDDED ACCORDING TO THE MANUFACTURER'S RECOMMENDATIONS.
4. LINERS SHALL BE INSTALLED SO THAT THEY CAN BE COVERED WITH 12 INCHES OF TOP DRESSING FORMING THE BOTTOM AND SIDES OF THE WATER QUALITY FACILITY. TOP DRESSING SHALL CONSISTS OF 6 INCHES OF CRUSHED ROCK COVERED WITH 6 INCHES OF NATIVE SOILS. THE ROCK LAYER IS TO MARK THE LOCATION OF THE LINER FOR FUTURE MAINTENANCE AND OPERATIONS. AS AN ALTERNATIVE TO CRUSHED ROCK, 12 INCHES OF NAITVE SOIL MAY BE USED IF ORANGE PLASTIC "SAFETY FENCING" OR ANOTHER HIGHLY-VISIBLE, CONTINUOUS MARKER IS EMBEDDED 6 INCHES ABOVE THE MEMBRANE.
5. IF POSSIBLE, LINERS SHOULD BE OF A CONTRASTING COLOR SO THAT MAINTENANCE WORKERS ARE AWARE OF ANY AREAS WHERE A LINER MAY HAVE BECOME EXPOSED WHEN MAINTAINING THE FACILITY.
6. GEOMEMBRANE LINERS SHALL NOT BE USED ON SLOPES STEEPER THAN 5H:1V TO PREVENT THE TOP DRESSING MATERIAL FROM SLIPPING. TEXTURED LINERS MAY BE USED ON SLOPES UP TO 3H:1V UPON RECOMMENDATION BY A GEOTECHNICAL ENGINEER OR ENGINEERING GEOLOGIST THAT THE TOP DRESSING WILL BE STABLE FOR ALL SITE CONDITIONS, INCLUDING MAINTENANCE.

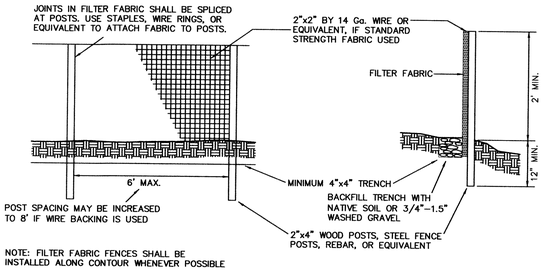

NOTE: FILTER FABRIC FENCES SHALL BE INSTALLED ALONG CONTOUR WHENEVER POSSIBLE

MAINTENANCE STANDARDS:

1. ANY DAMAGE SHALL BE REPAIRED IMMEDIATELY.
2. IF CONCENTRATED FLOWS ARE EVIDENT UPHILL OF THE FENCE, THEY MUST BE INTERCEPTED AND CONVEYED TO A SEDIMENT TRAP OR POND.
3. IT IS IMPORTANT TO CHECK THE UPHILL SIDE OF THE FENCE FOR SIGNS OF THE FENCE CLOGGING AND ACTING AS A BARRIER TO FLOW AND THEN CAUSING CHANNELIZATION OF FLOWS PARALLEL TO THE FENCE. IF THIS OCCURS, REPLACE THE FENCE AND/OR REMOVE THE TRAPPED SEDIMENT.
4. SEDIMENT MUST BE REMOVED WHEN THE SEDIMENT IS 6" HIGH.
5. IF THE FILTER FABRIC HAS DETERIORATED DUE TO ULTRAVIOLET BREAKDOWN, IT SHALL BE REPLACED.

SILT FENCE WITH LINEAR TRENCH DETAIL

N.T.S.

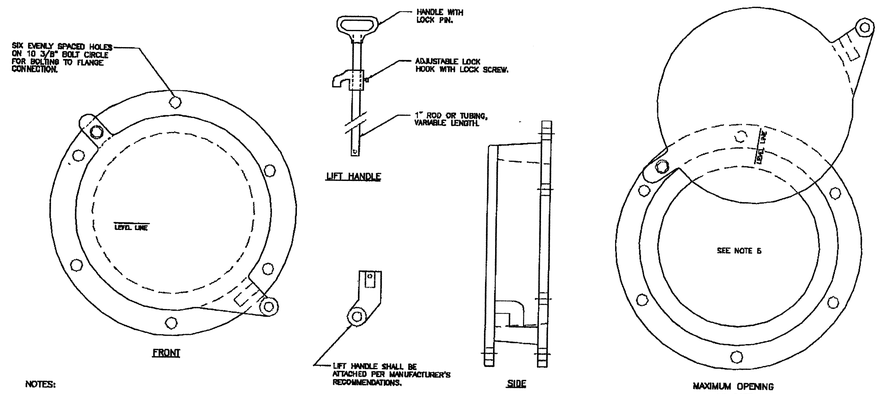

NOTES:

1. SHEAR GATE SHALL BE ALUMINUM ALLOY PER ASTM B26M AND ASTM B275, DESIGNATION 2G32a, OR CAST IRON ASTM A48 CLASS 30B AS REQUIRED.
2. GATE SHALL BE 8" DIAM. UNLESS OTHERWISE SPECIFIED.
3. GATE SHALL BE JOINED TO TEE SECTION BY BOLTING (THROUGH FLANGE), WELDING, OR OTHER SECURE MEANS.
4. LIFT ROD: AS SPECIFIED BY MFR. WITH HANDLE EXTENDING TO WITHIN ONE FOOT OF COVER AND ADJUSTABLE HOOK LOCK FASTENED TO FRAME OR UPPER HANDHOLD.
5. GATE SHALL NOT OPEN BEYOND THE CLEAR OPENING BY LIMITED HINGE MOVEMENT, STOP TAB, OR SOME OTHER DEVICE.
6. NEOPRENE RUBBER GASKET REQUIRED BETWEEN RISER MOUNTING FLANGE AND GATE FLANGE.
7. MATING SURFACES OF LID AND BODY TO BE MACHINED FOR PROPER FIT.
8. FLANGE MOUNTING BOLTS SHALL BE 3/8" DIAM. STAINLESS STEEL.
9. ALTERNATE CLEANOUT/SHEAR GATES TO THE DESIGN SHOWN ARE ACCEPTABLE, PROVIDED THEY MEET THE MATERIAL SPECIFICATIONS ABOVE AND HAVE A SIX BOLT, 10 3/8" BOLT CIRCLE FOR BOLTING TO THE FLANGE CONNECTION.

FROP-T SHEAR GATE DETAIL

N.T.S.

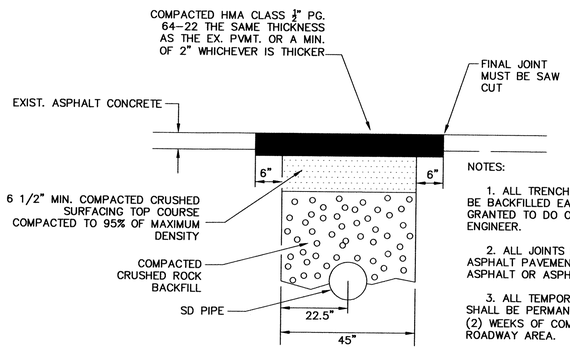

NOTES:

1. ALL TRENCHES IN ROADWAY AREAS SHALL BE BACKFILLED EACH DAY, UNLESS PERMISSION IS GRANTED TO DO OTHERWISE BY THE CITY ENGINEER.
2. ALL JOINTS BETWEEN THE NEW & EXIST. ASPHALT PAVEMENT SHALL BE PAINTED WITH HOT ASPHALT OR ASPHALT EMULSION.
3. ALL TEMPORARY PATCHES ON TRENCHES SHALL BE PERMANENTLY PATCHED WITHIN TWO (2) WEEKS OF COMPLETION OF WORK WITHIN THE ROADWAY AREA.
4. HMA COMPACTION SHALL BE PER WSDOT SECTION 5-04.3(10).

PAVEMENT RESTORATION DETAIL

N.T.S.

☒ APPROVED
☐ APPROVED SUBJECT TO CORRECTIONS NOTED
DATE 6/10/2020
BY _____ here
CITY OF MAPLE VALLEY PUBLIC WORKS DEPT.

DALEY-MORROW-POBLETE, INC.
726 AUBURN WAY NORTH
AUBURN, WASHINGTON 98002
PHONE: 253-833-2200, FAX: 253-833-2206
dmp INCORPORATED
ENGINEERING - SURVEYING
LAND PLANNING

CITY OF MAPLE VALLEY
P.O. BOX 320
MAPLE VALLEY, WA 98038

REVISIONS

NO.	DATE	DESCRIPTION	BY

MAPLE VALLEY
2016 WATER QUALITY RETROFITS

GENERAL DETAILS

DRAWN: ASP
DMP NO: 20-115
DATE: 06/10/2020

ALEXANDER S. POBLETE
STATE OF WASHINGTON
48352
REGISTERED PROFESSIONAL ENGINEER
6/10/20
STAMP NOT VALID UNLESS SIGNED & DATED

C3

B:\Projects\20-115 MV POND RETROS\20115ENG.DWG

20-115

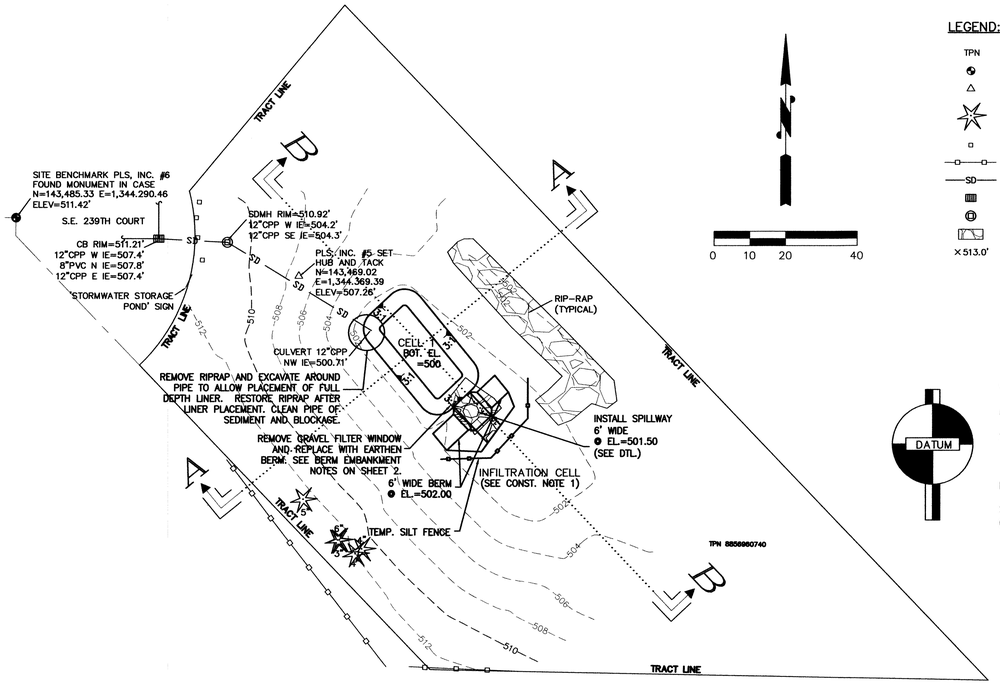

PLAN

SCALE: 1"=20'

LEGEND:

TPN	TAX PARCEL NUMBER
	FOUND MONUMENT IN CASE
	SET HUB AND TACK
	TREE (CONIFEROUS) WITH TRUNK DIAMETER NOTED
	BOLLARD
	FENCE
—SD—	STORM CONNECTION
	CATCH BASIN (CB)
	STORM DRAIN MANHOLE (SDMH)
	RIP-RAP
×513.0'	SPOT ELEVATION

DATUM

VERTICAL DATUM: NAVD 88

HORIZONTAL DATUM: NAD 83/2011

SITE BENCHMARK: PLS, INC. #6
FOUND MON. IN CASE
(SEE PLAN FOR LOCATION)

ELEVATION = 511.42

SURVEY PROVIDED BY PLS, INC.
(425) 313-9378

CONSTRUCTION SEQUENCE

4-A. SEE GENERAL CONSTRUCTION SEQUENCE 1 THROUGH 4 ON SHEET C2.

4-B INSTALL TEMPORARY SILT FENCE PER DETAIL ON SHEET 3.

4-C. REMOVE EXISTING VEGETATION AND RIP-RAP WITHIN AREAS TO BE LINED.

4-D. BEGIN GRADING AND REMOVE GRAVEL FILTER WINDOW AS INDICATED IN SECTION B-B.

4-E. CONSTRUCT BERM PER BERM EMBANKMENT NOTES ON SHEET C2.

4-F. INSTALL LINER PER PLAN AND SECTIONS.

4-G. INSTALL SPILLWAY PER DETAIL.

4-H. RESTORE RIP-RAP. SEE PLAN AND RIP-RAP NOTES ON SHEET C2.

4-I. SEE GENERAL CONSTRUCTION SEQUENCE 5 THROUGH 11 ON SHEET C2.

CONSTRUCTION NOTES

1. MINIMIZE DISTURBANCE IN INFILTRATION CELL. SCARIFY BOTTOM IF COMPACTED.

2. EX. GRAVEL PAD AT THE BOTTOM OF THE POND NEED NOT BE RESTORED.

3. FIELD ADJUSTMENTS SHALL BE MADE AS NECESSARY TO ALLOW INSTALLATION OF FULL THICKNESS OF LINER.

4. 18" LINER THICKNESS SHOWN IS FOR COMPACTED TILL LINERS. SEE LINER OPTIONS IN SHEET C3.

5. CONTRACTOR SHALL MONITOR THE WEATHER, AND WHEN WET WEATHER IS EXPECTED, PLASTIC SHEETING SHALL BE USED TO COVER EXPOSED SOILS WITHIN THE POND.

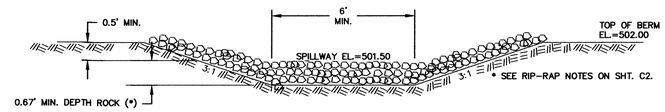

SPILLWAY DETAIL

SCALE: NTS

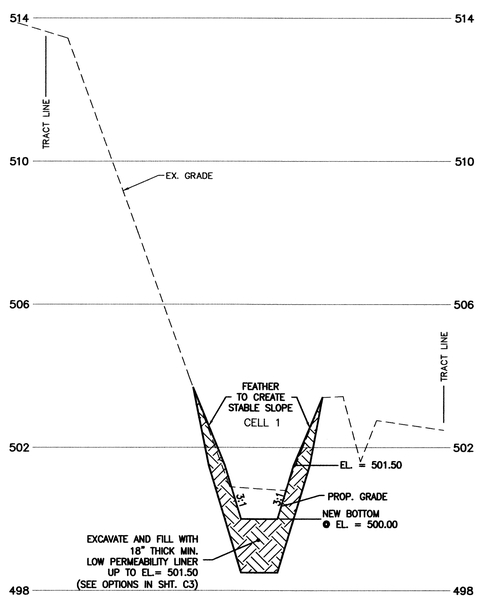

SECTION A-A

SCALE: 1"=20' HORIZ. 1" = 2' VERT.

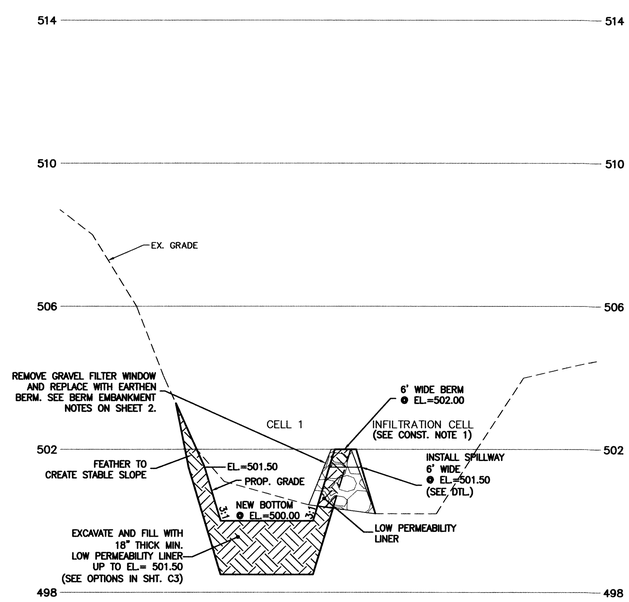

SECTION B-B

SCALE: 1"=20' HORIZ. 1" = 2' VERT.

CAUTION!

UNDERGROUND UTILITIES EXIST IN THE AREA AND UTILITY INFORMATION SHOWN MAY BE INCOMPLETE. STATE LAW REQUIRES THAT CONTRACTOR CONTACT THE ONE-CALL UTILITY LOCATE SERVICE AT LEAST 48 HOURS BEFORE STARTING ANY CONSTRUCTION.

811

☒ APPROVED
☐ APPROVED SUBJECT TO CORRECTIONS NOTED

DATE 6/10/2020

BY

CITY OF MAPLE VALLEY
PUBLIC WORKS DEPT.

DALEY-MORROW-POBLETE, INC.
726 AUBURN WAY NORTH
AUBURN, WASHINGTON 98002
PHONE: 253-333-2200, FAX: 253-333-2206
dmp INCORPORATED
ENGINEERING - SURVEYING
LAND PLANNING

CITY OF MAPLE VALLEY
P.O. BOX 320
MAPLE VALLEY, WA 98038

REVISIONS

NO.	DATE	DESCRIPTION	BY

MAPLE VALLEY
2016 WATER QUALITY RETROFITS
VALLEY GREEN DIV. 2
TRACT B (D92161)
W.Q. LINER

DRAWN: ASP

DMP NO: 20-115

DATE: 06/10/2020

ALEXANDER S. POBLETE
STATE OF WASHINGTON
29352
REGISTERED
PROFESSIONAL ENGINEER
6/10/2020

STAMP NOT VALID UNLESS SIGNED & DATED

C4

4 OF 9 SHEETS

B:\Projects\20-115 MV POND RETROFS\20115ENG.DWG

20-115

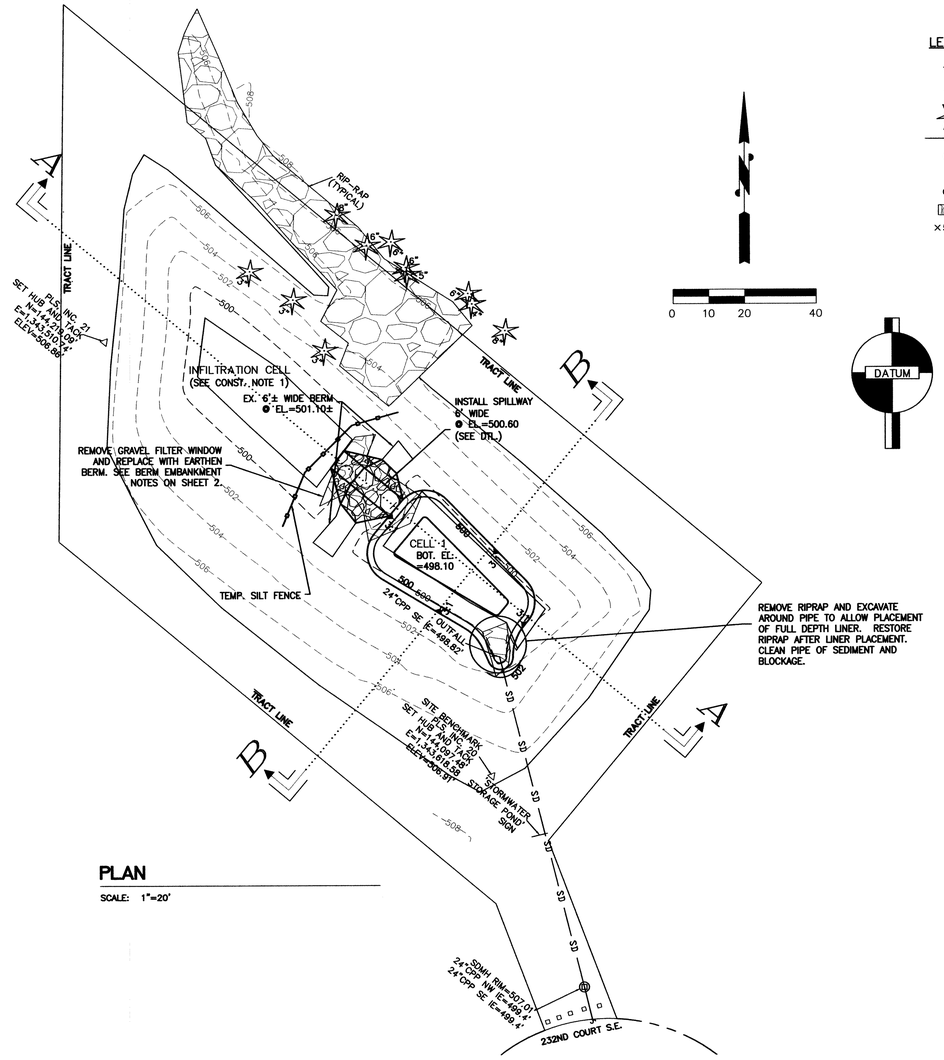

PLAN

SCALE: 1"=20'

LEGEND:

TPN	TAX PARCEL NUMBER
△	SET HUB AND TACK
	TREE (CONIFEROUS) WITH TRUNK DIAMETER NOTED
—SD—	STORM CONNECTION
	STORM DRAIN MANHOLE (SDMH)
IE	INVERT ELEVATION
CPP	CORRUGATED PLASTIC PIPE
	RIP-RAP
×506.0'	SPOT ELEVATION
▫	BOLLARD

0 10 20 40

DATUM

VERTICAL DATUM: NAVD 88

HORIZONTAL DATUM: NAD 83/2011

SITE BENCHMARK: PLS, INC. 20
SET HUB AND TACK
(SEE PLAN FOR LOCATION)

ELEVATION = 506.91

SURVEY PROVIDED BY PLS, INC.
(425) 313-9378

CONSTRUCTION SEQUENCE

4-A. SEE GENERAL CONSTRUCTION SEQUENCE 1 THROUGH 4 ON SHEET C2.

4-B. INSTALL TEMPORARY SILT FENCE PER DETAIL ON SHEET 3.

4-C. REMOVE EXISTING VEGETATION AND RIP-RAP WITHIN AREAS TO BE LINED.

4-D. BEGIN GRADING AND REMOVE GRAVEL FILTER WINDOW AS INDICATED IN SECTION A-A.

4-E. RECONSTRUCT BERM PER BERM EMBANKMENT NOTES ON SHEET C2.

4-F. INSTALL LINER PER PLAN AND SECTIONS.

4-G. INSTALL SPILLWAY PER DETAIL.

4-H. RESTORE RIP-RAP. SEE PLAN AND RIP-RAP NOTES ON SHEET C2.

4-I. SEE GENERAL CONSTRUCTION SEQUENCE 5 THROUGH 11 ON SHEET C2.

CONSTRUCTION NOTES

1. MINIMIZE DISTURBANCE IN INFILTRATION CELL. SCARIFY BOTTOM IF COMPACTED.

2. EX. GRAVEL PAD AT THE BOTTOM OF THE POND NEED NOT BE RESTORED.

3. FIELD ADJUSTMENTS SHALL BE MADE AS NECESSARY TO ALLOW INSTALLATION OF FULL THICKNESS OF LINER.

4. 18" LINER THICKNESS SHOWN IS FOR COMPACTED TILL LINERS. SEE LINER OPTIONS IN SHEET C3.

5. CONTRACTOR SHALL MONITOR THE WEATHER, AND WHEN WET WEATHER IS EXPECTED, PLASTIC SHEETING SHALL BE USED TO COVER EXPOSED SOILS WITHIN THE POND.

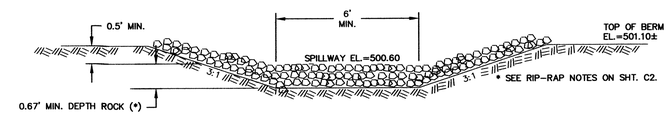

SPILLWAY DETAIL

SCALE: NTS

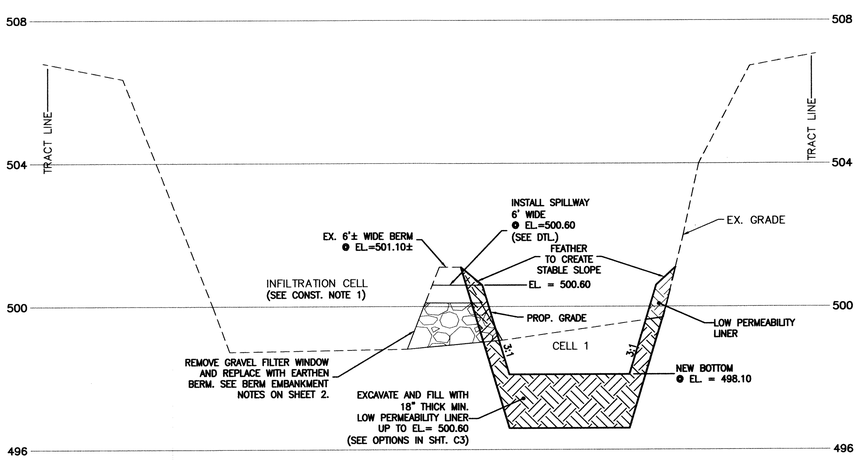

SECTION A-A

SCALE: 1"=20' HORIZ. 1" = 2' VERT.

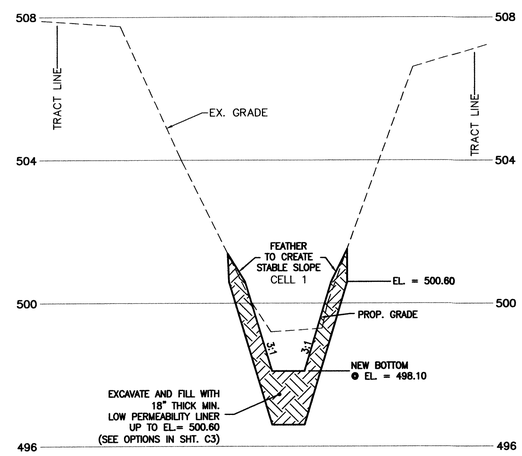

SECTION B-B

SCALE: 1"=20' HORIZ. 1" = 2' VERT.

☒ APPROVED
☐ APPROVED SUBJECT TO CORRECTIONS NOTED
DATE 6/10/2020
BY
CITY OF MAPLE VALLEY PUBLIC WORKS DEPT.

CAUTION!
UNDERGROUND UTILITIES EXIST IN THE AREA AND UTILITY INFORMATION SHOWN MAY BE INCOMPLETE. STATE LAW REQUIRES THAT CONTRACTOR CONTACT THE ONE-CALL UTILITY LOCATE SERVICE AT LEAST 48 HOURS BEFORE STARTING ANY CONSTRUCTION.
811

DALEY-MORROW-POBLETE, INC.
ENGINEERING - SURVEYING - LAND PLANNING
2700 SOUTH 320TH STREET
AUBURN, WASHINGTON 98002
PHONE: 253-333-2200, FAX: 253-333-2206

CITY OF MAPLE VALLEY
P.O. BOX 320
MAPLE VALLEY, WA 98038

REVISIONS

NO.	DATE	DESCRIPTION	BY

MAPLE VALLEY
2016 WATER QUALITY RETROFITS
VALLEY GREEN DIV. 2
TRACT C (D92162)
W.O. LINER

DRAWN: ASP
DMP NO: 20-115
DATE: 06/10/2020

ALEXANDER S. POBLETE, STATE OF WASHINGTON, 28320, REGISTERED PROFESSIONAL ENGINEER, 6/10/2020
STAMP NOT VALID UNLESS SIGNED & DATED

C5

B:\Projects\20-115 MV POND RETROS\20115ENG.DWG

20-115

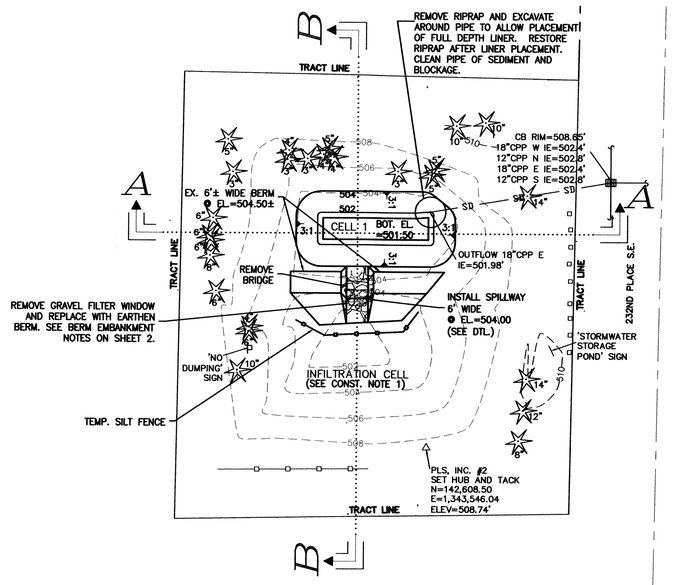

PLAN

SCALE: 1"=20'

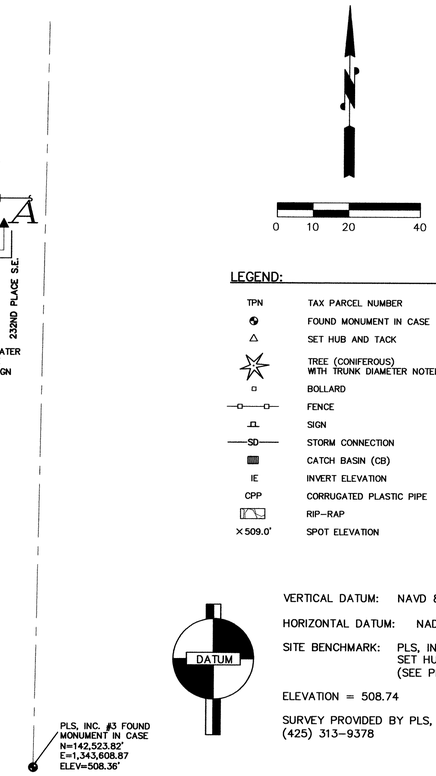

LEGEND:

TPN	TAX PARCEL NUMBER
	FOUND MONUMENT IN CASE
△	SET HUB AND TACK
	TREE (CONIFEROUS) WITH TRUNK DIAMETER NOTED
	BOLLARD
	FENCE
	SIGN
—SD—	STORM CONNECTION
	CATCH BASIN (CB)
IE	INVERT ELEVATION
CPP	CORRUGATED PLASTIC PIPE
	RIP-RAP
×509.0'	SPOT ELEVATION

DATUM

VERTICAL DATUM: NAVD 88

HORIZONTAL DATUM: NAD 83/2011

SITE BENCHMARK: PLS, INC. #2
SET HUB AND TACK
(SEE PLAN FOR LOCATION)

ELEVATION = 508.74

SURVEY PROVIDED BY PLS, INC.
(425) 313-9378

CONSTRUCTION SEQUENCE

4-A. SEE GENERAL CONSTRUCTION SEQUENCE 1 THROUGH 4 ON SHEET C2.

4-B. INSTALL TEMPORARY SILT FENCE PER DETAIL ON SHEET 3.

4-C. REMOVE EXISTING VEGETATION AND RIP-RAP WITHIN AREAS TO BE LINED.

4-D. BEGIN GRADING AND REMOVE GRAVEL FILTER WINDOW AS INDICATED IN SECTION B-B.

4-E. RECONSTRUCT BERM PER BERM EMBANKMENT NOTES ON SHEET C2.

4-F. INSTALL LINER PER PLAN AND SECTIONS.

4-G. INSTALL SPILLWAY PER DETAIL.

4-H. RESTORE RIP-RAP. SEE PLAN AND RIP-RAP NOTES ON SHEET C2.

4-I. SEE GENERAL CONSTRUCTION SEQUENCE 5 THROUGH 11 ON SHEET C2.

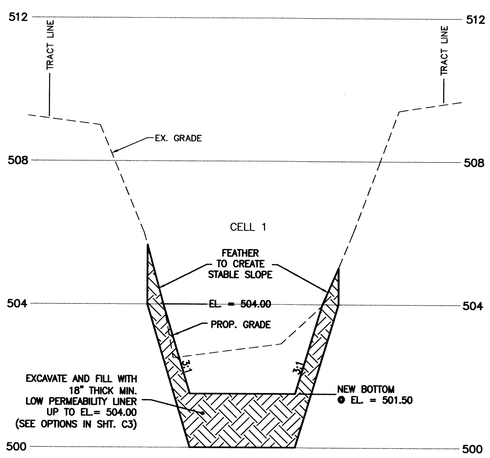

SECTION A-A

SCALE: 1"=20' HORIZ. 1" = 2' VERT.

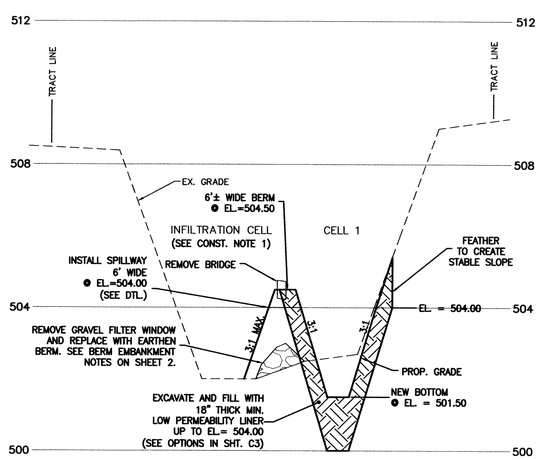

SECTION B-B

SCALE: 1"=20' HORIZ. 1" = 2' VERT.

CONSTRUCTION NOTES

1. MINIMIZE DISTURBANCE IN INFILTRATION CELL. SCARIFY BOTTOM IF COMPACTED.

2. EX. GRAVEL PAD AT THE BOTTOM OF THE POND NEED NOT BE RESTORED.

3. FIELD ADJUSTMENTS SHALL BE MADE AS NECESSARY TO ALLOW INSTALLATION OF FULL THICKNESS OF LINER.

4. 18" LINER THICKNESS SHOWN IS FOR COMPACTED TILL LINERS. SEE LINER OPTIONS IN SHEET C3.

5. CONTRACTOR SHALL MONITOR THE WEATHER, AND WHEN WET WEATHER IS EXPECTED, PLASTIC SHEETING SHALL BE USED TO COVER EXPOSED SOILS WITHIN THE POND.

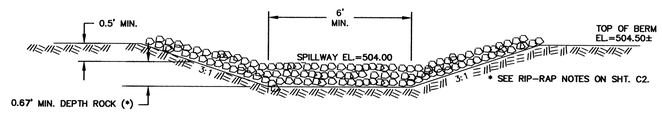

SPILLWAY DETAIL

SCALE: NTS

CAUTION!

UNDERGROUND UTILITIES EXIST IN THE AREA AND UTILITY INFORMATION SHOWN MAY BE INCOMPLETE. STATE LAW REQUIRES THAT CONTRACTOR CONTACT THE ONE-CALL UTILITY LOCATE SERVICE AT LEAST 48 HOURS BEFORE STARTING ANY CONSTRUCTION.

811

☒ APPROVED
☐ APPROVED SUBJECT TO CORRECTIONS NOTED

DATE 6/10/2020

BY

CITY OF MAPLE VALLEY PUBLIC WORKS DEPT.

DALEY-MORROW-POBLETE, INC.
726 - AUBURN WAY NORTH
AUBURN, WASHINGTON 98002
PHONE: 253-333-2200 FAX: 253-333-2206
dmp INCORPORATED
ENGINEERING - SURVEYING
LAND PLANNING

CITY OF MAPLE VALLEY
P.O. BOX 320
MAPLE VALLEY, WA 98038

REVISIONS

NO.	DATE	DESCRIPTION	BY

MAPLE VALLEY
2016 WATER QUALITY RETROFITS
VALLEY GREEN DIV. 1
TRACT D (D92098)
W.Q. LINER

DRAWN: ASP

DMP NO: 20-115

DATE: 06/10/2020

ALEXANDER S. POBLETE
STATE OF WASHINGTON
28352
REGISTERED PROFESSIONAL ENGINEER
6/10/20

STAMP NOT VALID UNLESS SIGNED & DATED

C6

B:\Projects\20-115 MV POND RETROS\20115ENG.DWG

20-115

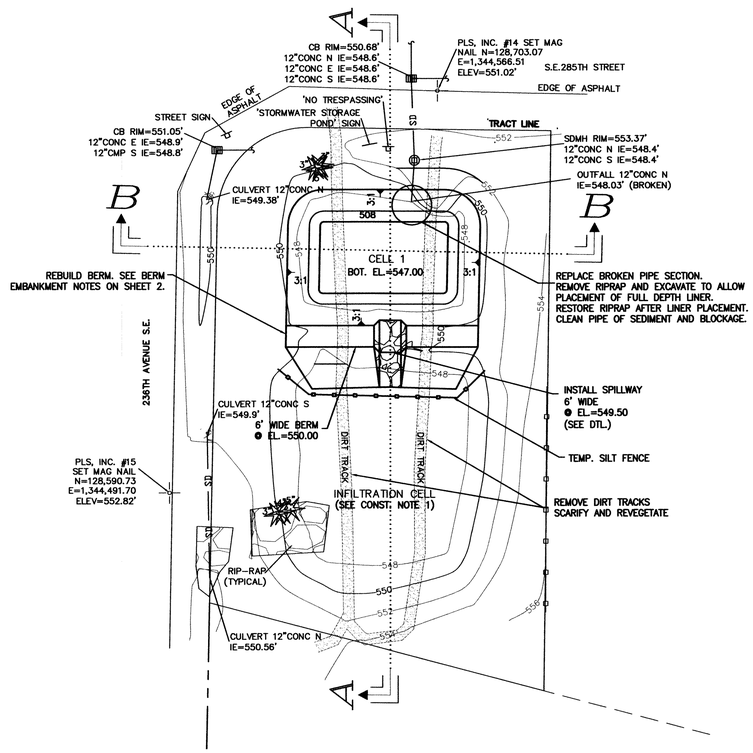

PLAN

SCALE: 1"=20'

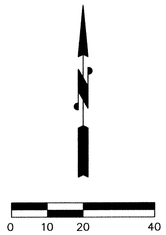

LEGEND:

TPN	TAX PARCEL NUMBER
	SET MAG NAIL
	TREE (CONIFEROUS) WITH TRUNK DIAMETER NOTED
	FENCE
	SIGN
—SD—	STORM CONNECTION
	CATCH BASIN (CB)
	STORM DRAIN MANHOLE (SDMH)
IE	INVERT ELEVATION
CONC	CONCRETE PIPE
CMP	CORRUGATED METAL PIPE
	DIRT TRACK
	RIP-RAP
×554.0'	SPOT ELEVATION

DATUM

VERTICAL DATUM: NAVD 88

HORIZONTAL DATUM: NAD 83/2011

SITE BENCHMARK: PLS, INC. #14 SET MAG NAIL (SEE PLAN FOR LOCATION)

ELEVATION = 551.02

SURVEY PROVIDED BY PLS, INC. (425) 313-9378

CONSTRUCTION SEQUENCE

4-A. SEE GENERAL CONSTRUCTION SEQUENCE 1 THROUGH 4 ON SHEET C2.

4-B. REMOVE EXISTING VEGETATION AND RIP-RAP WITHIN AREAS TO BE LINED.

4-C. BEGIN GRADING.

4-D. REBUILD BERM PER BERM EMBANKMENT NOTES ON SHEET C2.

4-E. INSTALL LINER PER PLAN AND SECTIONS.

4-F. INSTALL SPILLWAY PER DETAIL.

4-G. RESTORE RIP-RAP. SEE PLAN AND RIP-RAP NOTES ON SHEET C2.

4-H. SEE GENERAL CONSTRUCTION SEQUENCE 5 THROUGH 11 ON SHEET C2.

CONSTRUCTION NOTES

1. MINIMIZE DISTURBANCE IN INFILTRATION CELL. SCARIFY BOTTOM IF COMPACTED.

2. FIELD ADJUSTMENTS SHALL BE MADE AS NECESSARY TO ALLOW INSTALLATION OF FULL THICKNESS OF LINER.

3. 18" LINER THICKNESS SHOWN IS FOR COMPACTED TILL LINERS. SEE LINER OPTIONS IN SHEET C3.

4. CONTRACTOR SHALL MONITOR THE WEATHER, AND WHEN WET WEATHER IS EXPECTED, PLASTIC SHEETING SHALL BE USED TO COVER EXPOSED SOILS WITHIN THE POND.

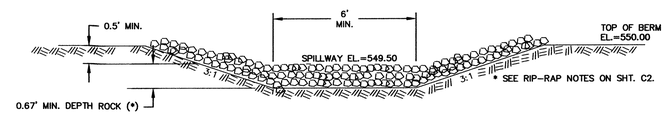

SPILLWAY DETAIL

SCALE: NTS

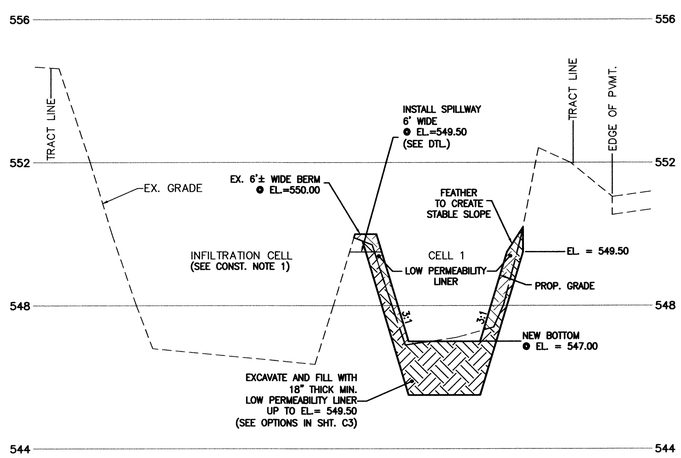

SECTION A-A

SCALE: 1"=20' HORIZ. 1" = 2' VERT.

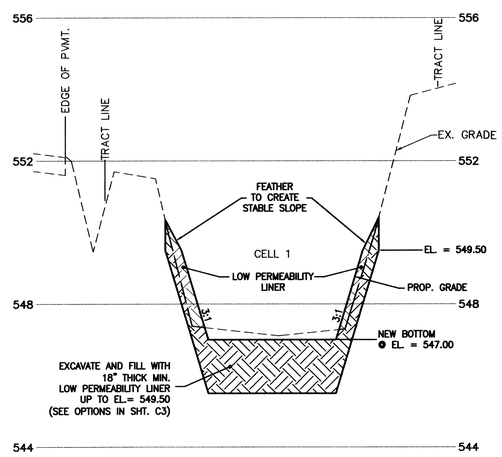

SECTION B-B

SCALE: 1"=20' HORIZ. 1" = 2' VERT.

CAUTION!

UNDERGROUND UTILITIES EXIST IN THE AREA AND UTILITY INFORMATION SHOWN MAY BE INCOMPLETE. STATE LAW REQUIRES THAT CONTRACTOR CONTACT THE ONE-CALL UTILITY LOCATE SERVICE AT LEAST 48 HOURS BEFORE STARTING ANY CONSTRUCTION.

811

☒ APPROVED
☐ APPROVED SUBJECT TO CORRECTIONS NOTED

DATE 6/10/2020

BY

CITY OF MAPLE VALLEY PUBLIC WORKS DEPT.

DALEY-MORROW-POBLETE, INC.
ENGINEERING - SURVEYING - LAND PLANNING
2121 AUBURN WAY NORTH
AUBURN, WASHINGTON 98002
PHONE: 253-333-2200, FAX: 253-333-2206

CITY OF MAPLE VALLEY
P.O. BOX 320
MAPLE VALLEY, WA 98038

REVISIONS

NO.	DATE	DESCRIPTION	BY

MAPLE VALLEY
2016 WATER QUALITY RETROFITS
PLEASANT ACRES DIV. 2
TRACT A (D92117)
W.Q. LINER AND SLOPE RESTORATION

DRAWN: ASP

DMP NO: 20-115

DATE: 06/10/2020

ALEXANDER S. POBLETE
STATE OF WASHINGTON
28392
REGISTERED PROFESSIONAL ENGINEER
6/10/2020

STAMP NOT VALID UNLESS SIGNED & DATED

C7

7 OF 9 SHEETS

B:\Projects\20-115 MV POND RETROS\20115ENG.DWG

20-115

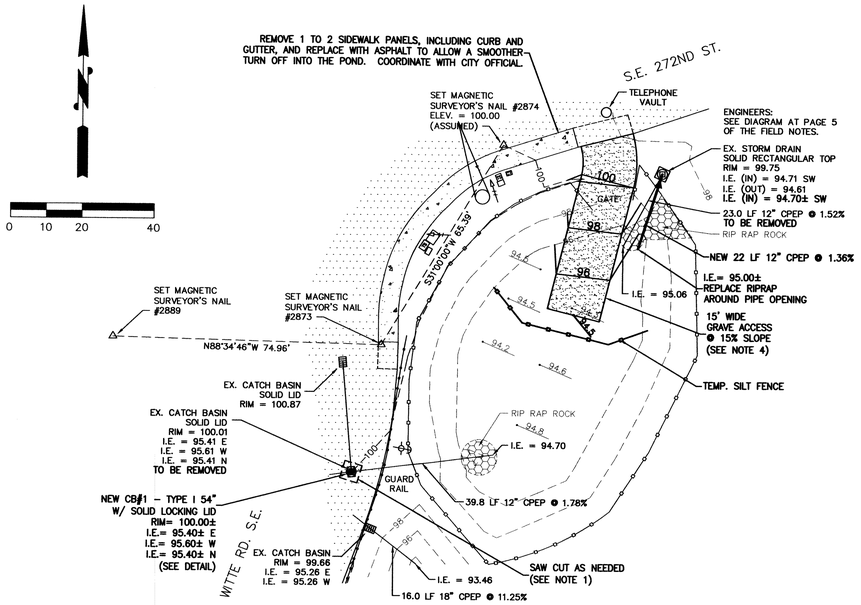

PLAN

SCALE: 1"=20'

LEGEND

- SET MAGNETIC SURVEYOR'S NAIL WITH 1-1/4" DIAMETER ALUMINUM TAG STAMPED: "DMP" WITH TAG NUMBER
- EX. UTILITY POLE
- EX. UTILITY POLE ANCHOR
- EX. UNDERGROUND UTILITY VAULT
- EX. CATCH BASIN-TYPE II
- EX. CATCH BASIN-TYPE I
- TRAFFIC AND CROSS WALK SIGNAL POLE WITH STREET LIGHT
- PEDESTRIAN SIGNAL CONTROLER
- EX. 6' HIGH CHAINLINK FENCE
- EX ASPHALT ROADWAY
- EX CONCRETE WALKWAY
- 94.2 SPOT ELEVATION

DATUM

MERIDIAN: ASSUMED

BASIS OF BEARINGS: LINE IN BETWEEN MAGNETIC SURVEYOR'S NAILS #2874 TO #2873 S 31°00'00" W

VERTICAL DATUM: ASSUMED

SITE BENCHMARK: MAGNETIC SURVEYOR'S NAIL WITH 1-1/4" DIAMETER ALUMINUM TAG (SEE PLAN FOR LOCATION) STAMPED: "DMP 2874"

ELEVATION = 100.00

CONSTRUCTION SEQUENCE

4-A. SEE GENERAL CONSTRUCTION SEQUENCE 1 THROUGH 4 ON SHEET C2.

4-B. INSTALL TEMPORARY SILT FENCE PER DETAIL ON SHEET 3.

4-C. INSTALL GRAVEL ACCESS ROAD.

4-D. INSTALL NEW CATCH BASIN AND PIPE PER PLAN.

4-E. REPLACE RIP-RAP. SEE PLAN AND RIP-RAP NOTES ON SHEET C2.

4-F. SEE GENERAL CONSTRUCTION SEQUENCE 5 THROUGH 11 ON SHEET C2.

CONSTRUCTION NOTES

1. PAVEMENT RESTORATION SHALL BE PER DETAIL ON SHEET C3.
2. CONTRACTOR TO PROVIDE TRAFFIC CONTROL.
3. SHORING FOR EXCAVATION DEEPER THAN 4 FEET SHALL BE PROVIDED.
4. GRAVEL ACCESS SHALL BE 6" THICK 1" - 1½" CRUSHED ROCK.
5. CONTRACTOR SHALL MONITOR THE WEATHER, AND WHEN WET WEATHER IS EXPECTED, PLASTIC SHEETING SHALL BE USED TO COVER EXPOSED SOILS WITHIN THE POND.

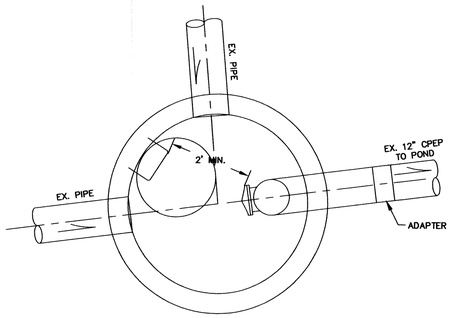

PLAN
SCALE: 1"=2'

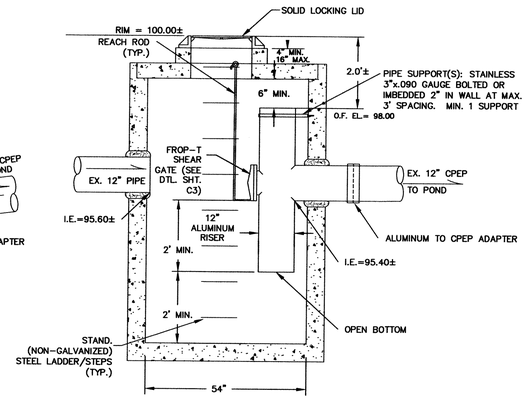

ELEVATION
SCALE: 1"=2'

NOTES:

1. METAL PARTS: CORROSION RESISTANT. NON-GALVANIZED.

2. FRAME & LADDER OR STEPS OFFSET SO
A. CLEANOUT GATE IS VISIBLE FROM TOP.
B. CLIMB-DOWN SPACE IS CLEAR OF RISER AND CLEANOUT GATE.

3. IF METAL OUTLET PIPE CONNECTS TO CEMENT CONCRETE PIPE, OUTLET PIPE TO HAVE SMOOTH O.D. EQUAL TO CONCRETE PIPE I.D. LESS 1/4".

NEW CB # 1 W/ RISER TYPE II - 54"

SCALE: 1"= 2'

CAUTION!

UNDERGROUND UTILITIES EXIST IN THE AREA AND UTILITY INFORMATION SHOWN MAY BE INCOMPLETE. STATE LAW REQUIRES THAT CONTRACTOR CONTACT THE ONE-CALL UTILITY LOCATE SERVICE AT LEAST 48 HOURS BEFORE STARTING ANY CONSTRUCTION.

811

☒ APPROVED
☐ APPROVED SUBJECT TO CORRECTIONS NOTED
DATE 6/10/2020
BY
CITY OF MAPLE VALLEY PUBLIC WORKS DEPT.

DALEY-MORROW-POBLETE, INC.
726 AUBURN WAY NORTH
AUBURN, WASHINGTON 98002
PHONE: 253-333-2200, FAX: 253-333-2206
dmp incorporated
ENGINEERING - SURVEYING
LAND PLANNING

CITY OF MAPLE VALLEY
P.O. BOX 320
MAPLE VALLEY, WA 98038

REVISIONS

NO.	DATE	DESCRIPTION	BY

MAPLE VALLEY
2016 WATER QUALITY RETROFITS
WITTE RD AND SE 272ND ST POND
(D99025)
SPILL CONTROL AND POND ACCESS

DRAWN: ASP
DMP NO: 20-115
DATE: 06/10/2020

ALEXANDER S. POBLETE
STATE OF WASHINGTON
26052
REGISTERED PROFESSIONAL ENGINEER
6-10-20
STAMP NOT VALID UNLESS SIGNED & DATED

C8

B:\Projects\20-115 MV POND RETROS\20115END.DWG

20-115

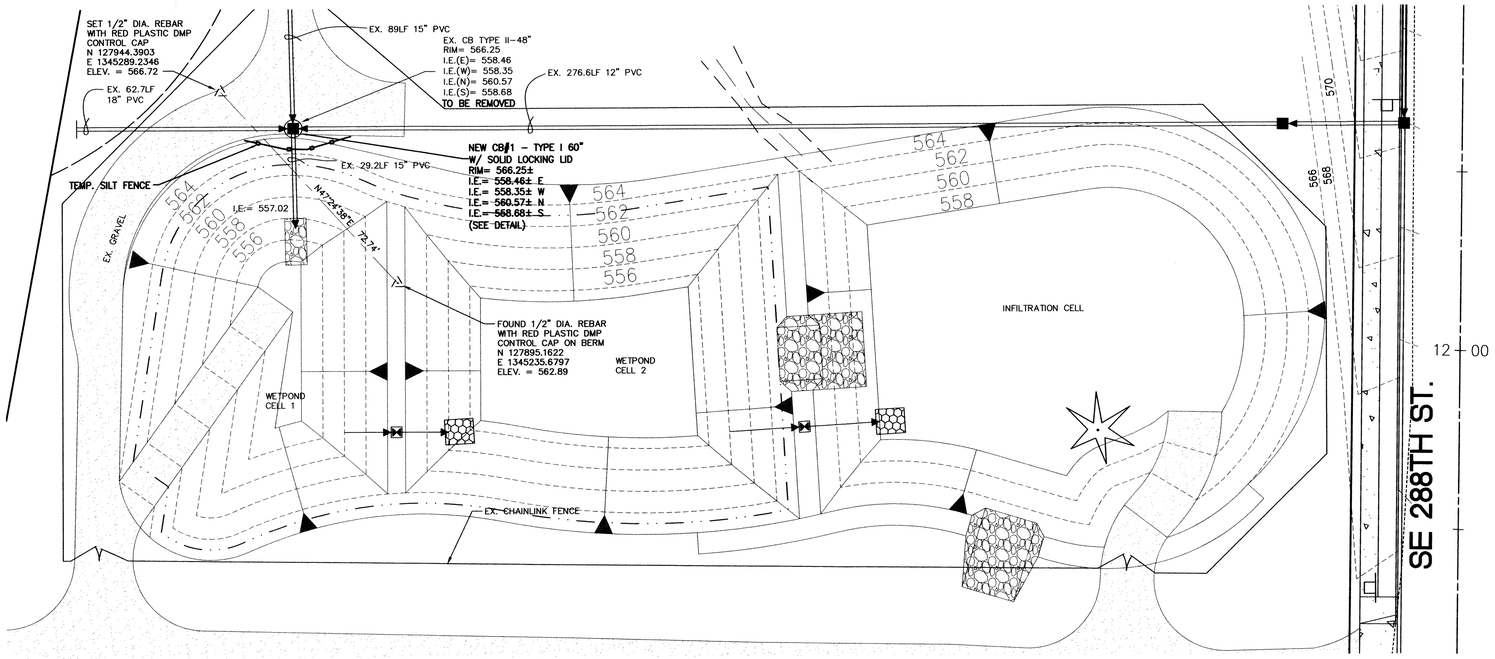

POND PLAN

SCALE: 1"=20'

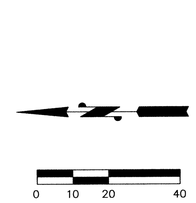

DATUM: ASSUMED

SITE BENCHMARK:

REBAR & RED CAP ON BERM BETWEEN CELLS 1 AND 2 10' E OF QUARRY SPALL OVERFLOW (SEE PLAN FOR LOCATION)

ELEVATION = 562.89

LEGEND:

- EX. STORM LINE
- EX. CATCH BASIN TYPE II
- EX. CATCH BASIN TYPE I
- EX. CONTOUR (518)
- EX. FENCE(CHAINLINK)
- EX. GRAVEL

CONSTRUCTION SEQUENCE

4-A. SEE GENERAL CONSTRUCTION SEQUENCE 1 THROUGH 4 ON SHEET C2.

4-B. INSTALL TEMPORARY SILT FENCE PER DETAIL ON SHEET 3.

4-C. INSTALL NEW CATCH BASIN PER PLAN.

4-D. SEE GENERAL CONSTRUCTION SEQUENCE 5 THROUGH 11 ON SHEET C2.

CONSTRUCTION NOTES

1. PLAN BASED ON CADD FILE PROVIDED BY THE CITY OF MAPLE VALLEY, AND SUPPLEMENT BY DMP, INC. CONTRACTOR TO FIELD VERIFY.

2. SHORING FOR EXCAVATION DEEPER THAN 4 FEET SHALL BE PROVIDED.

3. CLEAN WATER DRAINED FROM CELLS 1 AND 2 MAY BE DISCHARGED INTO THE INFILTRATION CELL WITH GUIDANCE FROM THE CITY.

4. CONTRACTOR SHALL MONITOR THE WEATHER, AND WHEN WET WEATHER IS EXPECTED, PLASTIC SHEETING SHALL BE USED TO COVER EXPOSED SOILS WITHIN THE POND.

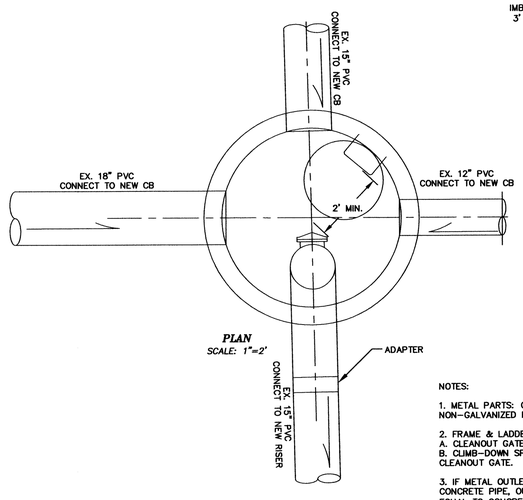

PLAN
SCALE: 1"=2'

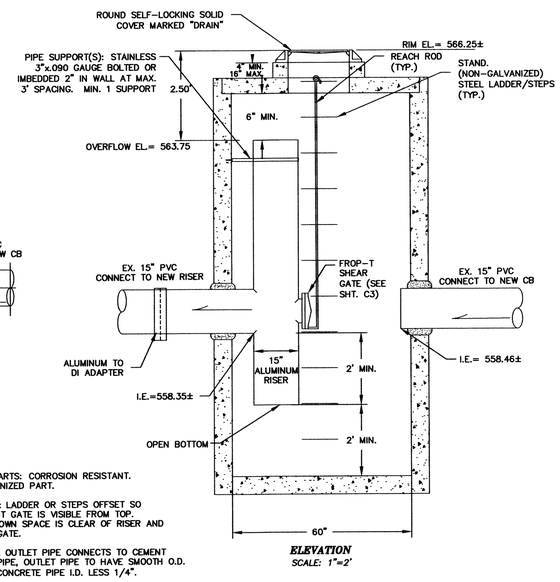

ELEVATION
SCALE: 1"=2'

NOTES:

1. METAL PARTS: CORROSION RESISTANT. NON-GALVANIZED PART.

2. FRAME & LADDER OR STEPS OFFSET SO
A. CLEANOUT GATE IS VISIBLE FROM TOP.
B. CLIMB-DOWN SPACE IS CLEAR OF RISER AND CLEANOUT GATE.

3. IF METAL OUTLET PIPE CONNECTS TO CEMENT CONCRETE PIPE, OUTLET PIPE TO HAVE SMOOTH O.D. EQUAL TO CONCRETE PIPE I.D. LESS 1/4".

NEW CB # 1 W/ RISER TYPE II - 60"

SCALE: 1" = 2'

CAUTION!

UNDERGROUND UTILITIES EXIST IN THE AREA AND UTILITY INFORMATION SHOWN MAY BE INCOMPLETE. STATE LAW REQUIRES THAT CONTRACTOR CONTACT THE ONE-CALL UTILITY LOCATE SERVICE AT LEAST 48 HOURS BEFORE STARTING ANY CONSTRUCTION.

811

☒ APPROVED
☐ APPROVED SUBJECT TO CORRECTIONS NOTED

DATE 6/10/2020

BY

CITY OF MAPLE VALLEY PUBLIC WORKS DEPT.

DALEY-MORROW-PORLETE, INC.
CIVIL ENGINEERS AND SURVEYORS
AUBURN, WASHINGTON 98002
PHONE: 253-333-2200, FAX: 253-333-2206
dmp INCORPORATED
ENGINEERING - SURVEYING
LAND PLANNING

CITY OF MAPLE VALLEY
P.O. BOX 320
MAPLE VALLEY, WA 98038

REVISIONS

NO.	DATE	DESCRIPTION	BY

MAPLE VALLEY
2016 WATER QUALITY RETROFITS
SAWYER CREST (D19995)
SPILL CONTROL

DRAWN: ASP
DMP NO: 20-115
DATE: 06/10/2020

STATE OF WASHINGTON ALEXANDER S. PORLETE 28352 REGISTERED PROFESSIONAL ENGINEER 6/10/2020

STAMP NOT VALID UNLESS SIGNED & DATED

C9

9 OF 9 SHEETS

B:\Projects\20-115 MV POND RETROFS\20115ENG.DWG